CRYST RAMA
1958
95 Cantiague Rock Road, Westbury NY 11590
ph:516.931.9090 fax: 516. 931.1254
info@crystorama.com www.crystorama.com

MODEL#: 9843-CH-CG
ASSEMBLY AND DRESSING INSTRUCTIONS

All electrical components must be installed by a licensed electrician in accordance with the National Electric Code and the appropriate local electrical codes.

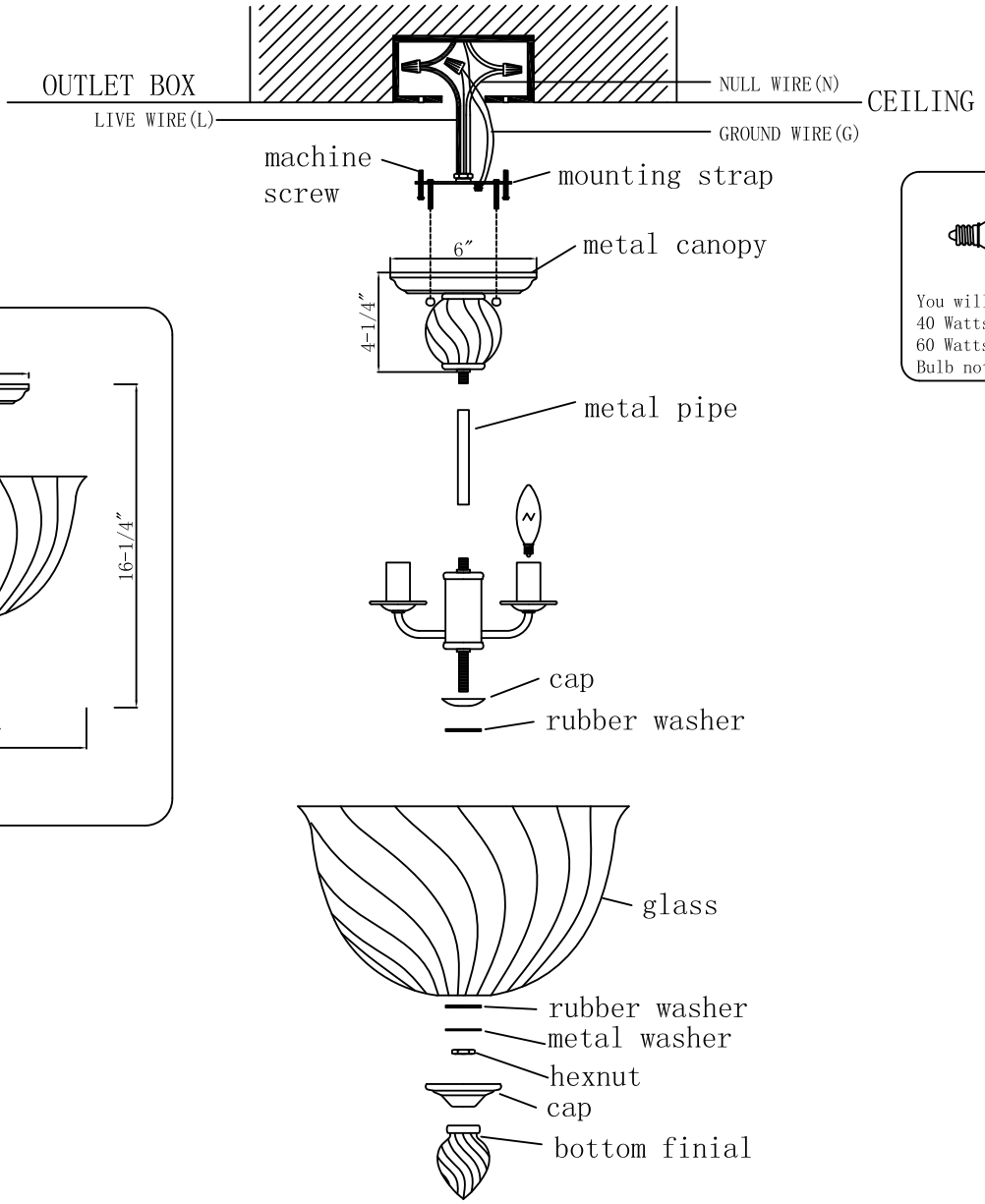

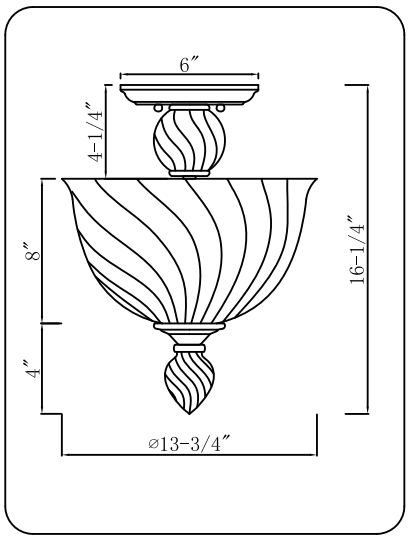

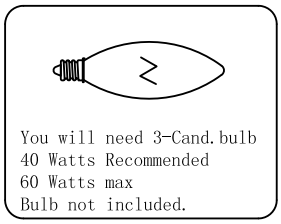

2013.06.23