THIS VANITY CAN BE MOUNTED UP OR DOWN

AVAILABLE PART IS:
91691GS (GLASS SHADE)

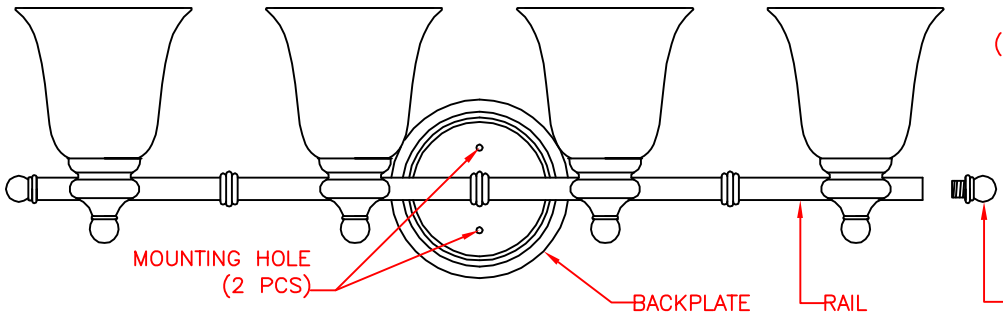

FRONT VIEW

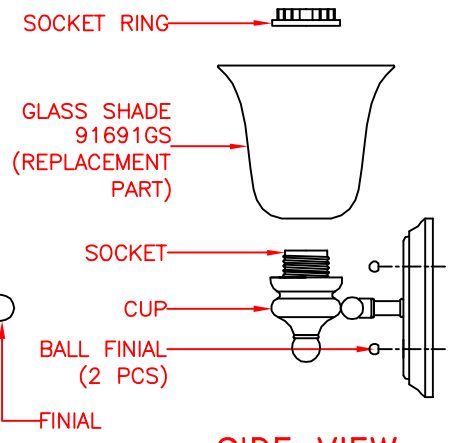

SIDE VIEW

PRODUCT SPECIFICATIONS

OVERALL ASSEMBLED DIMENSIONS

HEIGHT: 23 CM (9"), WIDTH: 80.6 CM (31-3/4"), EXTENSION: 18.4 CM (7-1/4").

- **4 LIGHTS:** UL LISTED. 100 WATT. MEDIUM BASE E-26 CERAMIC SOCKET WITH OUTSIDE THREADS. (4) METAL SOCKET RINGS PROVIDED.
- **BACKPLATE:** PLATED STEEL, 15.2 CM (6") DIA. x 2.5 CM (1") HEIGHT.
- **CUP:** PLATED STEEL, 6.1 CM (2-7/16") DIA. x 4.9 CM (2") HEIGHT.
- **GLASS SHADE:** FROSTED WHITE GLASS SHADE, 15 CM (5-7/8") DIA. x 13 CM (5-1/8") HEIGHT. SHAPED AS SHOWN. GLASS SHADE SHOULD FIT SNUGLY AND STRAIGHT WHEN ATTACHED.
- **RAIL:** PLATED STEEL, 1.9 CM (3/4") DIA. TUBING, 80.6 CM (31-3/4") LENGTH.
- **SUPPLY WIRE:** UL LISTED. 18 AWG, 150°C, MUST EXTEND A MINIMUM OF 15.2 (6") PAST CENTER OF BACKPLATE. WIRES MUST BE LEAD FREE.
- **LABELS:** UL AND CSA OR CUL, MANUFACTURE DATE, MODEL # AND COUNTRY OF ORIGIN LABELS PROVIDED ON INSIDE OF BACKPLATE. RELAMPING LABEL FOR 100 WATT TYPE "A" BULB PROVIDED ON INSIDE OF CUP. RELAMPING LABELS ARE NOT ALLOWED TO BE PLACED ON THE OUTSIDE OF THE PRODUCT OR CUP.

PACKAGING AND SHIPPING

- THE ITEM IS DISASSEMBLED FOR SHIPPING AS SHOWN. EACH PART IS SECURED SO THEY CAN NOT MOVE DURING SHIPPING.
- HARDWARE PACK #005 PROVIDED. ENTIRE FIXTURE IS COVERED IN A CLOSED PLASTIC BAG WITH A SMALL BAG OF SILICA INSIDE.
- THE CARTON IS MADE OF DOUBLE WALL CORRUGATED CARDBOARD "A MA A". BROWN IN COLOR. THE INNER PACKING IS DIE-CUT CARDBOARD OR STYROFOAM TO PROTECT AND SECURE THE FIXTURE AND MUST PASS THE FEDEX DROP TEST REQUIREMENTS.
- EACH CARTON SHALL BE PRINTED WITH A LINE DRAWING AND THE KENROY HOME NAME AND LOGO, MODEL NUMBER AND FINISH, EACH CARTON SHALL BE PROVIDED A UPC LABEL. THE UPC BAR CODE AS FOLLOWS: CH=053392042776.

OTHER DETAILS:

- ENTIRE BACKPLATE ASSEMBLY MUST SIT FLUSH AGAINST WALL SURFACE.
- ALL VISIBLE METAL PARTS MUST MATCH FIXTURE FINISH UNLESS OTHERWISE SPECIFIED.
- MODEL 91694CH INSTRUCTIONS ARE TO BE PRINTED CLEARLY ON QUALITY PAPER AND PACKED WITH EACH FIXTURE.
- ALL BAGS MUST BE LABELED WITH OFFICIAL "THIS BAG IS NOT A TOY" STATEMENT.
- ASSEMBLY TIME: 10 MINUTES.
- THIS ITEM MUST BE UL APPROVED FOR DAMP LOCATION, THE UL NUMBER IS E314733.
- DIMS OF BOX: 81.5 CM (32") LENGTH x 23 CM (9") WIDTH x 29 CM (11-7/16") HEIGHT.
- NET WEIGHT: 6.9 LBS. GROSS WEIGHT: 11.4 LBS.

KENROY HOME
11660 CENTRAL PARKWAY
JACKSONVILLE, FL. 32224
PHONE: 904-642-4340
FAX: 904-642-4150

THIS DOCUMENT AND THE INFORMATION THAT IT DISCLOSES IS THE EXCLUSIVE PROPERTY OF KENROY HOME. ANY REPRODUCTION OR USE OF THIS DRAWING IN PART OR IN WHOLE, WITHOUT THE EXPRESS CONSENT OF THE PROPRIETOR IS PROHIBITED. © 2010 KENROY HOME.

DATE: 1/13/2010	SCALE: NONE	DRAWN BY: JAMES	REVISION DATE: / REVISION DATE:	MODEL #: 91694
REFERENCE: CONNERY 4 LIGHT VANITY			APPROVAL:	FINISH: CH
			REVISION DATE:	PAGE: 1 OF: 1