AVAILABLE PART IS:
10370GS (SHADE)

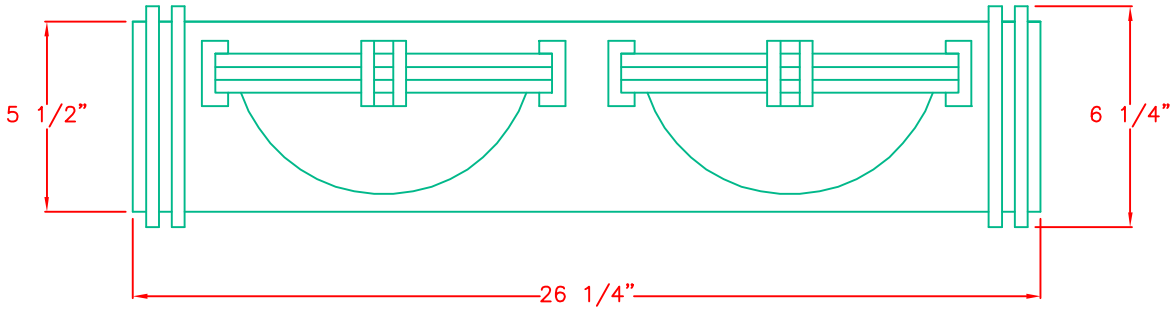

BACKPLATE DETAIL

NOTE: BACKPLATE MUST SIT FLAT ON WALL.

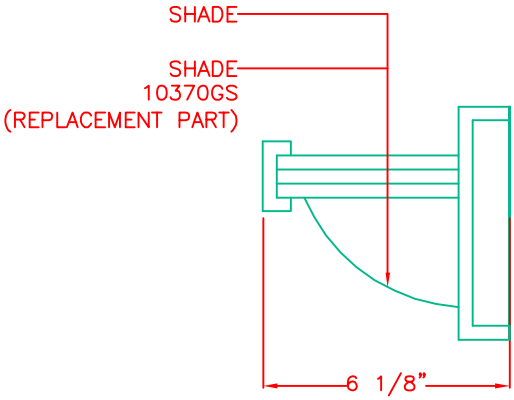

PRODUCT SPECIFICATIONS

☐ **OVERALL ASSEMBLED DIMENSIONS**

HEIGHT– 15.6 CM (6 1/4") WIDTH– 96.8 CM (26") EXTENSION– 15.6 CM (6 1/4")

☐ **2 LIGHTS:** MEDIUM BASE E–27 CERAMIC SOCKET WITH OUTSIDE THREADS. LEADS ARE A MIN. OF 15.2 CM (6") PAST CENTER OF BACKPLATE.

☐ **BACKPLATE:** STEEL, 1 MM THICK, XXX CM (XXX") HIGH x XX CM (XX") WIDE x X CM (XXX") DEEP. SEE DETAIL.

☐ **GLASS SHADES:** FAUX ALABASTER GLASS, 24.1 CM (9 1/2") DIA. x 8.9 CM (3 1/2") HIGH, SHAPED AS SHOWN.

☐ **LABELS:** UL AND CSA OR CUL, MANUFACTURING DATE, MODEL # AND COUNTRY OF ORIGIN LABELS PROVIDED ON BACKPLATE. RELAMPING LABEL FOR 60 WATT TYPE "A" BULB PROVIDED NEAR SOCKET.

PACKAGING AND SHIPPING DETAILS

☐ THE FIXTURE IS SHIPPED DISASSEMBLED AS SHOWN. ALL PARTS ARE SECURED SO THEY CAN NOT MOVE DURING SHIPPING.

☐ HARDWARE PACK #XXX, #XXX AND (X) BALL FINIALS PROVIDED. ENTIRE FIXTURE IS COVERED IN A CLOSED PLASTIC BAG WITH A SMALL BAG OF SILICA GEL INSIDE.

☐ THE CARTON IS MADE OF A DOUBLE WALL CORRUGATED CARDBOARD "A MA A". THE INNER PACKING IS DIE–CUT CARDBOARD OR STYROFOAM SUFFICIENT TO PROTECT AND SECURE THE FIXTURE AND MUST PASS THE DROP TEST REQUIREMENTS. EXTERIOR SURFACE IS BROWN KRAFT.

☐ EACH CARTON SHALL BE PRINTED WITH A LINE DRAWING AND THE KENROY HOME NAME AND LOGO, MODEL NUMBER, SKU NUMBER AND FINISH, EACH CARTON SHALL BE PROVIDED A UPC LABEL. THE UPC BAR CODE AS FOLLOWS: 053392145910.

OTHER DETAILS:

☐ ALL VISIBLE METAL AND RESIN PARTS MUST MATCH FIXTURE FINISH.
☐ ENTIRE BACKPLATE ASSEMBLY MUST SIT FLUSH AGAINST WALL SURFACE.
☐ MODEL #10371 INSTRUCTIONS MUST BE PACKED WITH EACH LAMP, AND BE PRINTED CLEARLY ON QUALITY PAPER.
☐ ALL BAGS MUST BE LABELED WITH OFFICIAL "THIS BAG IS NOT A TOY" STATEMENT.
☐ DIMS OF BOX: 74 CM (29–1/8") LENGTH x 21 CM (8–1/4") WIDTH x 23 CM (9") HEIGHT.
☐ NET WEIGHT: 6.38 LBS. GROSS WEIGHT: 7.7 LBS.
☐ ASSEMBLING TIME: 5 MINUTES.
☐ THE UL NUMBER IS E149494F1.

KENROY HOME
11660 CENTRAL PARKWAY
JACKSONVILLE, FL. 32224
PHONE: 904–642–4340
FAX: 904–642–4150

THIS DOCUMENT AND THE INFORMATION THAT IT DISCLOSES IS THE EXCLUSIVE PROPERTY OF KENROY HOME. ANY REPRODUCTION OR USE OF THIS DRAWING IN PART OR IN WHOLE, WITHOUT THE EXPRESS CONSENT OF THE PROPRIETOR IS PROHIBITED. © 2000 KENROY HOME.

REVISION DATE: 7/1/06 remove B/W label REVISION DATE: 4/14/08 ADD PARTS NO.				MODEL #: 10371
DATE: 5/3/01	SCALE: NONE	DRAWN BY: MJA	REVISION DATE:	FINISHES: BS
REFERENCE: LUMEN VANITY 2 LT.		APPROVAL:	REVISION DATE:	PAGE: OF: