THIS SCONCE CAN BE MOUNTED UP OR DOWN

AVAILABLE PART IS:
90083GS (GLASS SHADE)

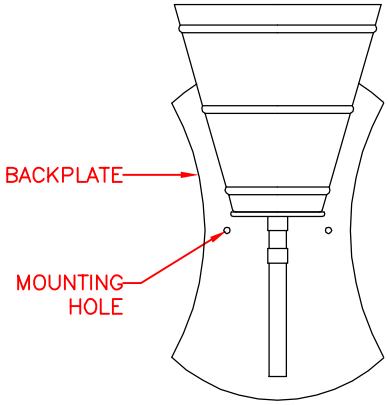

FRONT VIEW

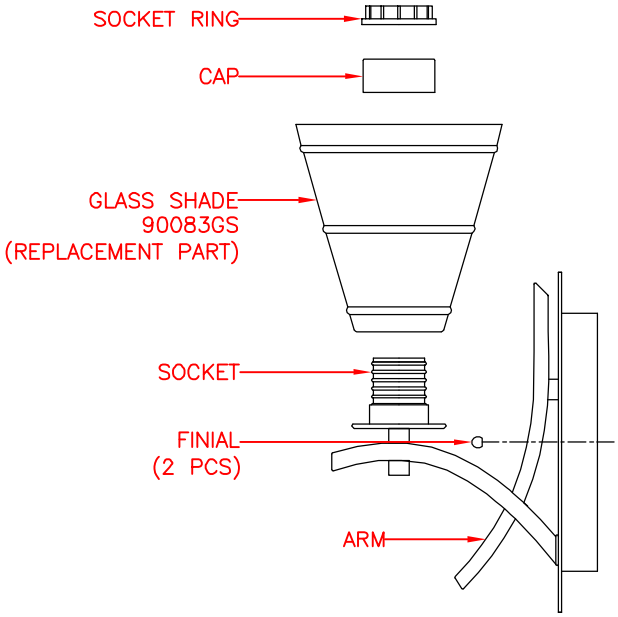

SIDE VIEW

PRODUCT SPECIFICATIONS

☐ **OVERALL ASSEMBLED DIMENSIONS**
HEIGHT: 30.9 CM (10–1/2"), WIDTH: 15.2 CM (6"), EXTENSION: 21 CM (8–1/4").

☐ **1 LIGHT:** UL LISTED. 100 WATT. MEDIUM BASE E–26 CERAMIC SOCKET WITH OUTSIDE THREADS. METAL SOCKET RING AND CAP ARE PROVIDED.

☐ **BACKPLATE:** PAINTED METAL, 23.4 CM (9–1/4") LENGTH X 14.6 CM (5–3/4") WIDTH x 2.8 CM (1–1/8") HEIGHT, (2) HOLES IN BACKPLATE FOR MOUNTING SCREWS PASS THROUGH. SHAPED AS SHOWN.

☐ **GLASS SHADE:** PAINTED AMBER GLASS SHADE WITH ORB RING, 15.2 CM (6") DIA. x 14 CM (5–1/2") HEIGHT. SHAPED AS SHOWN.

☐ **ARM:** PAINTED METAL, 1.2 SQ. TUBING, 15.9 CM (6–1/4") WIDTH x 21 CM (8–1/4") HEIGHT. SHAPED AS SHOWN.

☐ **SUPPLY WIRE:** UL LISTED. 18 AWG, 105°C, MUST EXTEND A MINIMUM OF 15.2 (6") PAST CENTER OF BACKPLATE. WIRES MUST BE LEAD FREE.

☐ **LABEL:** UL AND CSA OR CUL, MANUFACTURING DATE, MODEL # AND COUNTRY OF ORIGIN LABELS PROVIDED ON BACKPLATE. RELAMPING LABEL FOR 100 WATT TYPE "A" BULB PROVIDED ON SOCKET OR NEAR SOCKET.

PACKAGING AND SHIPPING

☐ THE ITEM IS DISASSEMBLED FOR SHIPPING AS SHOWN. EACH PART IS SECURED SO THEY CAN NOT MOVE DURING SHIPPING.

☐ HARDWARE PACK #005 PROVIDED. ENTIRE FIXTURE IS COVERED IN A CLOSED PLASTIC BAG WITH A SMALL BAG OF SILICA INSIDE.

☐ THE CARTON IS MADE OF DOUBLE WALL, CORRUGATED CARDBOARD "A MA A". BROWN IN COLOR. THE INNER PACKING IS DIE–CUT CARDBOARD OR STYROFOAM TO PROTECT AND SECURE THE LAMP AND MUST PASS THE FEDEX AND ISTA–3A DROP TEST REQUIREMENTS.

☐ EACH CARTON SHALL BE PRINTED WITH A LINE DRAWING AND THE KENROY HOME NAME AND LOGO, MODEL NUMBER AND FINISH, EACH CARTON SHALL BE PROVIDED A UPC LABEL. THE UPC BAR CODE AS FOLLOWS: ORB=053392056834.

OTHER DETAILS:

☐ ENTIRE BACKPLATE ASSEMBLY MUST SIT FLUSH AGAINST WALL SURFACE.

☐ ALL VISIBLE PARTS MUST MATCH FIXTURE FINISH UNLESS OTHERWISE SPECIFIED.

☐ MODEL 90081ORB INSTRUCTIONS ARE TO BE PRINTED CLEARLY ON QUALITY PAPER AND PACKED WITH EACH FIXTURE.

☐ ALL BAGS MUST BE LABELED WITH OFFICIAL "THIS BAG IS NOT A TOY" STATEMENT.

☐ ASSEMBLY TIME: 5 MINUTES.

☐ DIMS OF BOX: 39.4 CM (15–1/2") LENGTH x 26.7 CM (10–1/2") WIDTH x 19 CM (7–1/2") HEIGHT. (CUFT.: 0.71')

☐ THE UL NUMBER IS E314733.

KENROY HOME
3723 Regent Boulevard
JACKSONVILLE, FL. 32224
PHONE: 904–642–4340
FAX: 904–642–4150

THIS DOCUMENT AND THE INFORMATION THAT IT DISCLOSES IS THE EXCLUSIVE PROPERTY OF KENROY HOME. ANY REPRODUCTION OR USE OF THIS DRAWING IN PART OR IN WHOLE, WITHOUT THE EXPRESS CONSENT OF THE PROPRIETOR IS PROHIBITED. © 2006 KENROY HOME.

DATE: 11/28/2006	SCALE: NONE	DRAWN BY: JAMES	REVISION DATE: 5/09/08 add parts NO. REVISION DATE: 2/16/2011 add note REVISION DATE: 5/9/2013 add package drawing	MODEL #: 90081 FINISH: ORB
REFERENCE: WRIGHT 1 LIGHT SCONCE			APPROVAL:	PAGE: 1 OF: 1
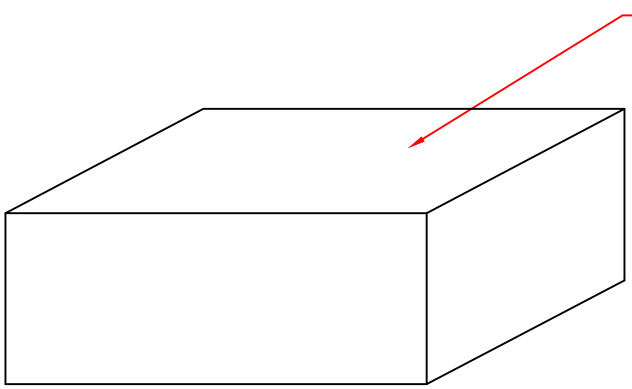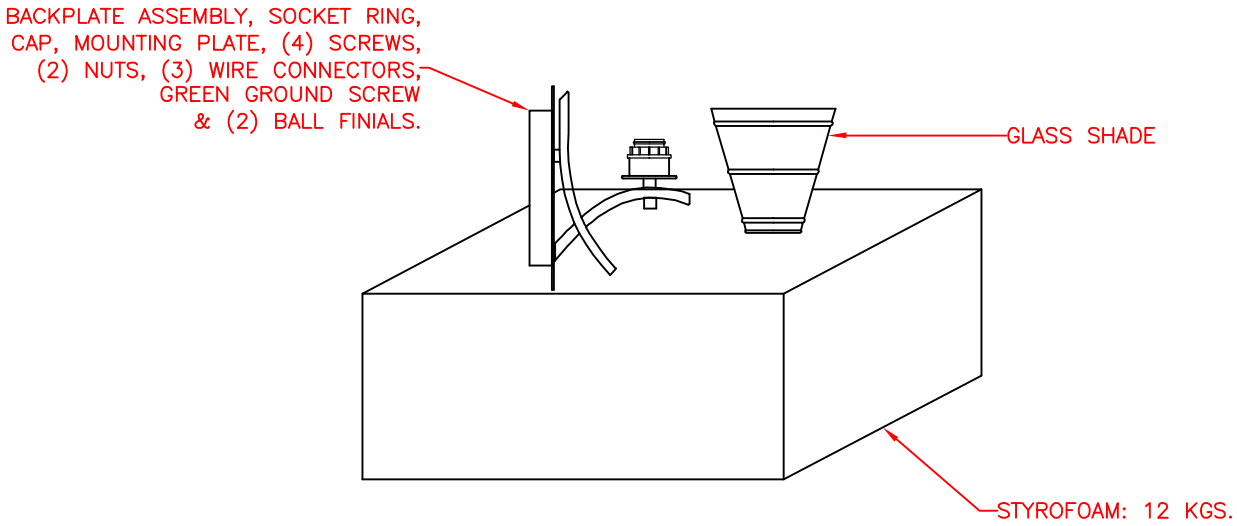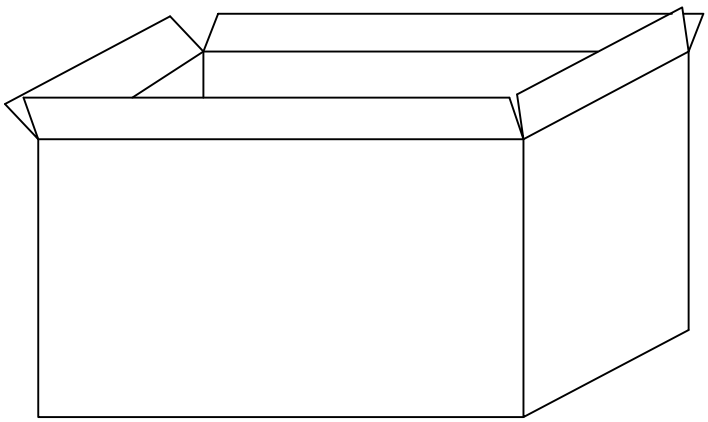
MODEL: 90081ORB
PACKING DIAGRAM