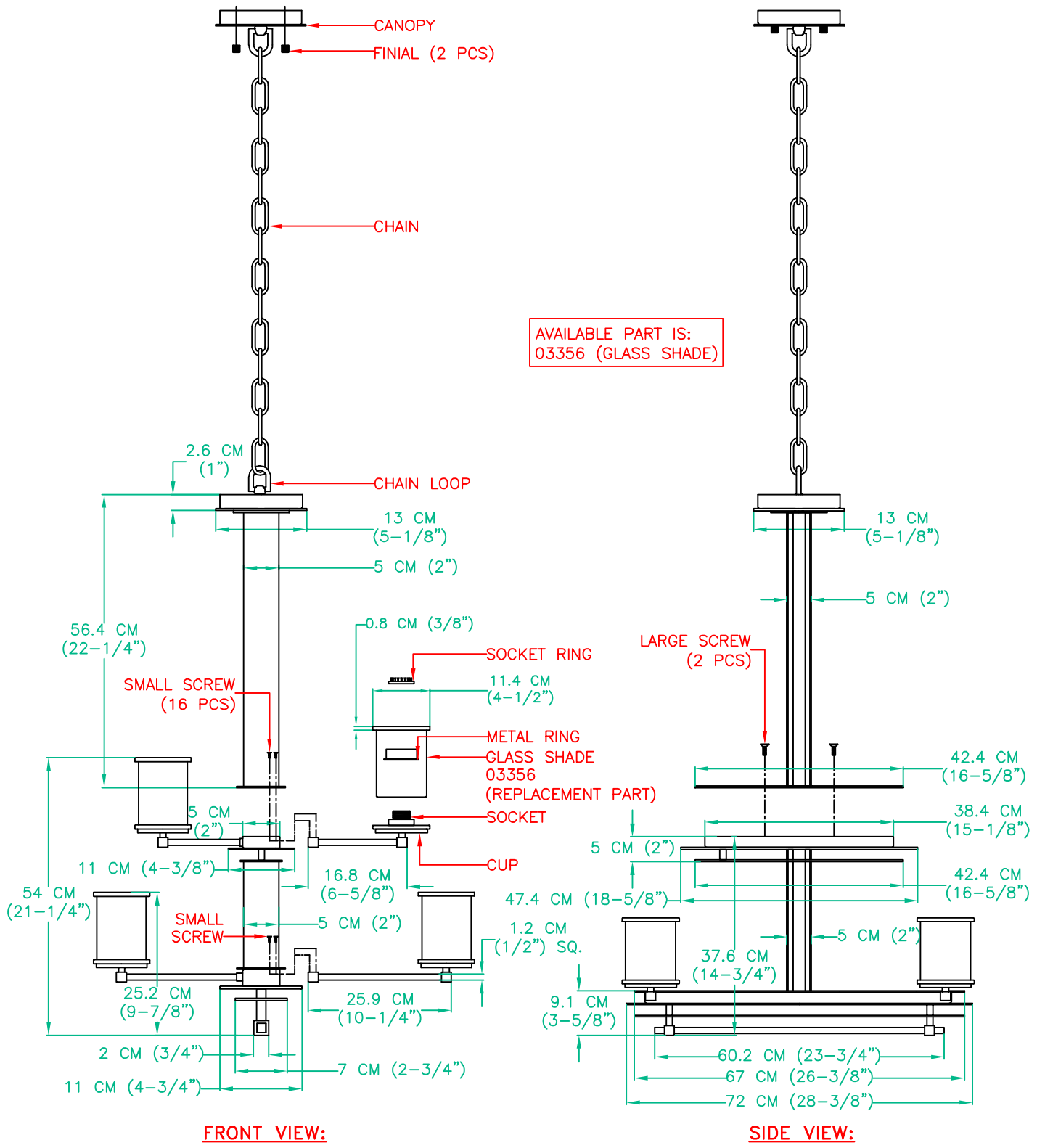

KENROY HOME 3723 Regent Boulevard JACKSONVILLE, FL. 32224 PHONE: 904-642-4340 FAX: 904-642-4150	THIS DOCUMENT AND THE INFORMATION THAT IT DISCLOSES IS THE EXCLUSIVE PROPERTY OF KENROY HOME. ANY REPRODUCTION OR USE OF THIS DRAWING IN PART OR IN WHOLE, WITHOUT THE EXPRESS CONSENT OF THE PROPRIETOR IS PROHIBITED. © 2006 KENROY HOME.		REVISION DATE: 4/7/08 ADD PARTS NO. REVISION DATE: 1/10/09 change wattage	MODEL #: 90384
	DATE: 12/16/2006	SCALE: NONE	DRAWN BY: JAMES REVISION DATE: 6/22/10 change total width	FINISHES: ORB
	REFERENCE: PLATEAU 8LT. CHANDELIER		APPROVAL: REVISION DATE: 6/19/2013 add package drawing	PAGE: 1 OF: 2

PRODUCT SPECIFICATIONS

- ☐ **OVERALL ASSEMBLED DIMENSIONS**
  HEIGHT: 97.2 CM (38–1/4"), WIDTH: 72 CM (28–3/8"), EXTENSION: 64 CM (25–1/4").

- ☐ **4+4 LIGHTS:** UL LISTED. 100 WATT. MEDIUM BASE E–26 CERAMIC SOCKET WITH OUTSIDE THREADS. METAL SOCKET RINGS ARE PROVIDED.

- ☐ **CANOPY:** PAINTED METAL, 13 CM (5–1/8") SQ. X 2.2 CM (7/8") HEIGHT, (2) HOLES IN CANOPY FOR MOUNTING SCREWS TO PASS THROUGH. SHAPED AS SHOWN.

- ☐ **CUP:** PAINTED METAL, 11.4 CM (4–1/2") SQ. x 1.6 CM (5/8") HEIGHT. SHAPED AS SHOWN.

- ☐ **GLASS SHADE:** LIGHT AMBER GLASS SHADE, 10 CM (3–7/8") SQ. x 15.2 CM (6") HEIGHT, A METAL FRAME STICKED ON GLASS SHADE. SHAPED AS SHOWN.

- ☐ **SUPPLY WIRE:** UL LISTED, MIN. 305 CM (10 FT.) LENGTH, 18 AWG., 2 CONDUCTORS, 105°C, BLACK COLOR. WIRES MUST BE LEAD FREE.

- ☐ **CHAIN:** PLATED METAL, 3.8 MM THICK, 183 CM (6 FT.) MIN. LENGTH.

- ☐ **LABELS:** UL, CSA OR CUL, MANUFACTURING DATE, MODEL # AND COUNTRY OF ORIGIN LABELS PROVIDED IN CANOPY. RELAMPING LABEL FOR 100 WATT MAX. TYPE "A" BULB PROVIDED NEAR SOCKET.

PACKAGING AND SHIPPING DETAILS

- ☐ THE FIXTURE IS DISASSEMBLED FOR SHIPPING. EACH PIECE IS PACKED IN IT'S OWN CARDBOARD CARTON.

- ☐ HARDWARE PACK #005 IS PROVIDED. ALL PARTS SHOULD BE SECURED SO THEY CAN NOT MOVE DURING SHIPPING.

- ☐ THE CARTON IS MADE OF DOUBLE WALL, CORRUGATED CARDBOARD "A MA A". BROWN IN COLOR. THE INNER PACKING IS DIE–CUT CARDBOARD OR STYROFOAM TO PROTECT AND SECURE THE LAMP AND MUST PASS THE FEDEX AND ISTA–3A DROP TEST REQUIREMENTS.

- ☐ EACH CARTON SHALL BE PRINTED WITH A LINE DRAWING AND THE KENROY HOME NAME AND LOGO, MODEL NUMBER AND FINISH, EACH CARTON SHALL BE PROVIDED A UPC LABEL. THE UPC BAR CODE AS FOLLOWS: 053392056667.

OTHER DETAILS

- ☐ ALL PARTS MUST MATCH FINISH UNLESS OTHERWISE SPECIFIED.

- ☐ MODEL 90384ORB INSTALLATION INSTRUCTIONS ARE TO BE PACKED WITH FIXTURE, AND BE PRINTED CLEARLY ON QUALITY PAPER.

- ☐ ALL BAGS MUST BE LABELED WITH OFFICIAL "THIS BAG IS NOT A TOY" STATEMENT.

- ☐ ASSEMBLY TIME: 40 MINUTES.

- ☐ DIMS OF BOX: 81.2 CM (32") LENGTH x 66 CM (26") WIDTH x 34.3 CM (13–1/2") HEIGHT.

- ☐ NET WEIGHT: 41.9 LBS.

- ☐ GROSS WEIGHT: 54.5 LBS.

- ☐ THE UL NUMBER IS E127416.