QUOIZEL
6 CORPORATE PARKWAY
GOOSE CREEK, SC. 29445
www. quoizel. com

Quoizel, Inc.
6 Corporate Parkway
Goose Creek, SC
29445

Customer Service
Phone 631.273.2700
Fax 631.231.7102
www.quoizel.com

Assembly Instruction Sheet #IS- NY1178P
For Style NY1178P

Tools Required: Flathead screwdriver, Phillips screwdriver, pliers, wire cutters, wire strippers, electrical tape, safety glasses.

Bulb Recommended: (2) Candelabra Base 60W Maximum
Estimated Assembly Time: 20-30 minutes

Preparation: Identify and inspect all parts before beginning installation. Check package content list and diagrams below to be sure all parts are present. If any parts are missing or damaged, do not attempt to assemble, install, or operate the fixture. Contact customer service for replacement parts.

Warnings and Cautions

Turn off electricity at circuit breaker or main fuse box before installation. Consult a licensed electrician if in doubt.

These instructions are provided for your safety. It is very important you read them completely before installing the fixture. We strongly recommend that a licensed, professional electrician perform the installation.

Disconnect fixture from power source before replacing bulbs. Make sure bulbs are given sufficient time to cool before removal. Do not subject glass parts to any shock while in operation or shattering may result.

Package Contents

Part	Description	Quantity
A	Crossbar	1 pc.
B	Nipple	1 pc.
C	Lock Washer	2 pcs.
D	Hex Nut	2 pcs.
E	Canopy Chain Loop	1 pc.
F	Canopy Lock Ring	1 pc.
G	Fixture Chain	1 pc.
H	Ceiling Canopy	1 pc.
I	Fixture Loop	1 pc.
J	Fixture Body	1 pc.
K	Candle Cover	2 pcs.

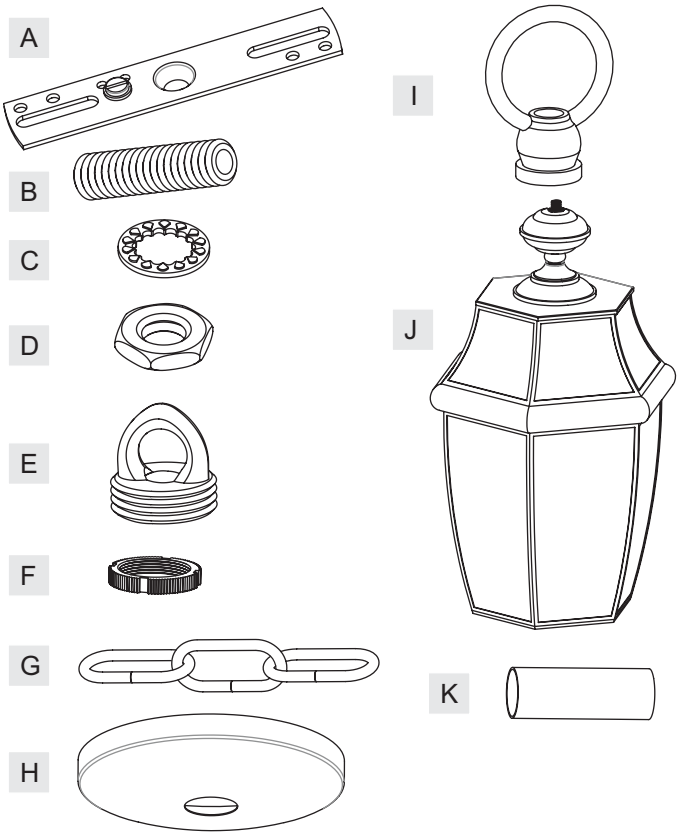

Thank you for purchasing a Quoizel product.
Need assistance with parts or assembly? Call Quoizel customer service at 1-631-273-2700
or visit us on-line at www.quoizel.com

©2013 Quoizel Inc.

May 2013

NY1178P
FINISH: PEWTER

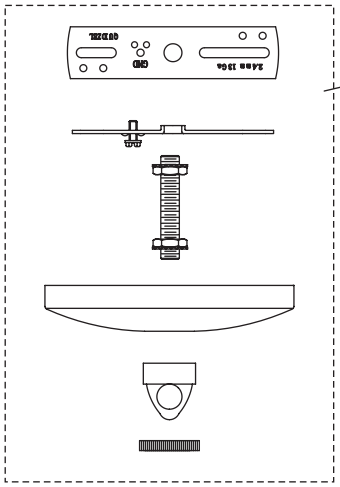

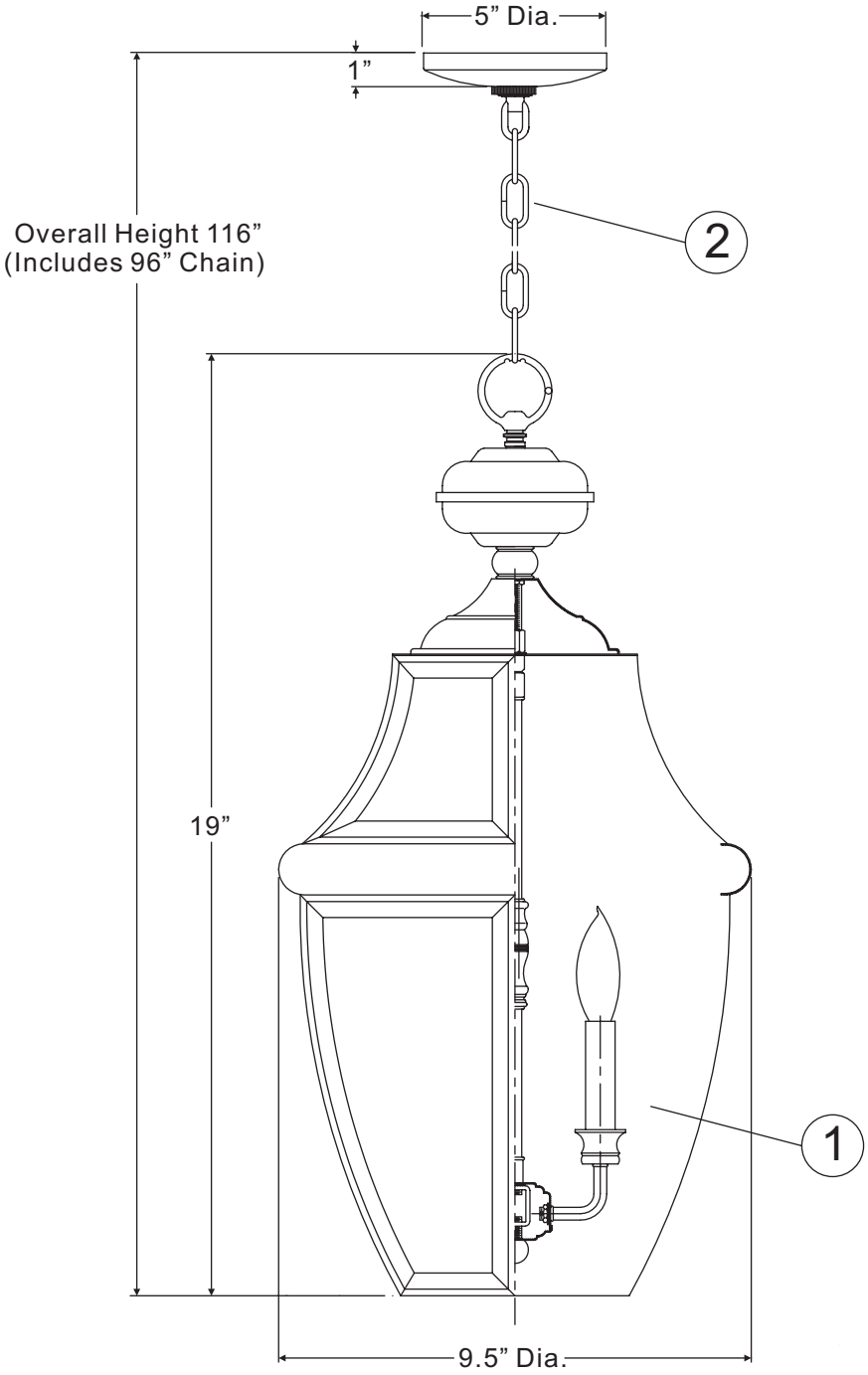

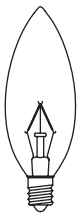

(2)60W Candelabra base bulbs (not Supplied)

NOTE: ALL DIMENSIONS ARE ROUNDED UP TO THE NEAREST 1/2″

NO.	PART NUMBER	REPLACEMENT PART DESCRIPTION	REQ.
1	M2228CCP	CANDLE COVER PEWTER 4.125"H	2
2	M2234CHP	CHAIN PEWTER 3.8MM X4’	1
3	9442KIT	MOUNTING HARDWARE /CANOPY PEWTER 5"D	1

QUOIZEL
6 CORPORATE PARKWAY
GOOSE CREEK, SC. 29445
www. quoizel. com

Assembly Instruction Sheet #IS- NY1178P
For Style NY1178P

STEP 1 – Attach Waterproof Washer and Fixture Loop to Fixture Body

A. Thread the Fixture Loop (I) onto the nipple on the top center of the Fixture Body (J) . Hand tighten until snug.

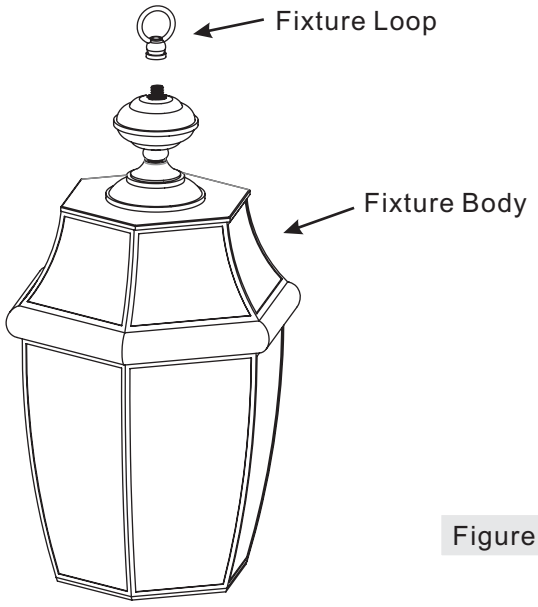

Figure 1

STEP 2 – Attach Crossbar to Outlet Box

A. Secure the Corssbar (A) to the outlet box with outlet box screws (not supplied). Tighten until snug.

Figure 2

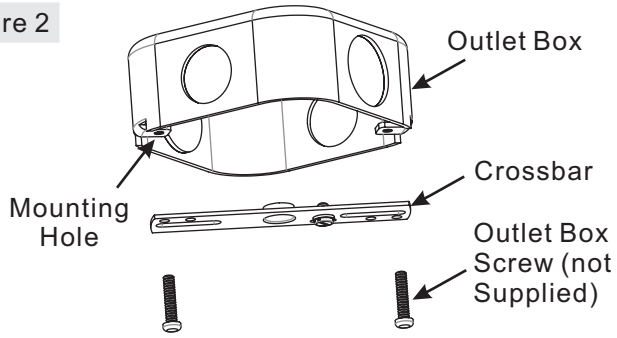

STEP 3 – Attach Nipple to Crossbar

A. Thread one Hex Nut (D) onto the top end of the Nipple (B).
B. Place one Lock Washer (C) over the top end of the Nipple (B) and then thread the Nipple (B) into the center lock hole of the Crossbar (A).
C. Using pliers, thread the hex Nut (D) against the Crossbar (A) and hand tighten until snug.

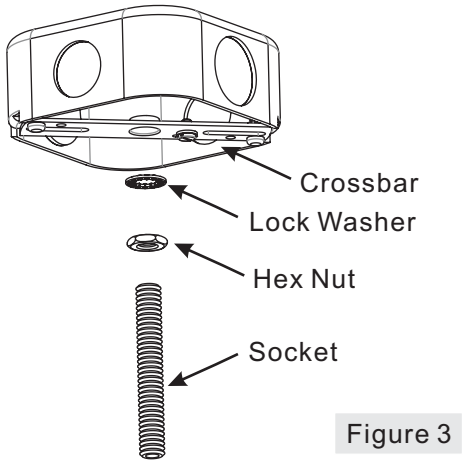

Figure 3

Thank you for purchasing a Quoizel product.
Need assistance with parts or assembly? Call Quoizel customer service at 1-631-273-2700
or visit us on-line at www.quoizel.com

©2013 Quoizel Inc.

May 2013

QUOIZEL
6 CORPORATE PARKWAY
GOOSE CREEK, SC. 29445
www. quoizel. com

Assembly Instruction Sheet #IS- NY1178P
For Style NY1178P

STEP 4 – Attach Canopy Chain Loop to Nipple

A. Thread another Hex Nut (D) onto the end of the Nipple (B).
B. Place the Lock Washer (C) over the end of the Nipple (B) and then thread the Canopy Chain Loop (E) onto the end of the Nipple (B).
C. Using pliers, thread the Hex Nut (D) against the Canopy Chain Loop (E) and hand tighten until snug.

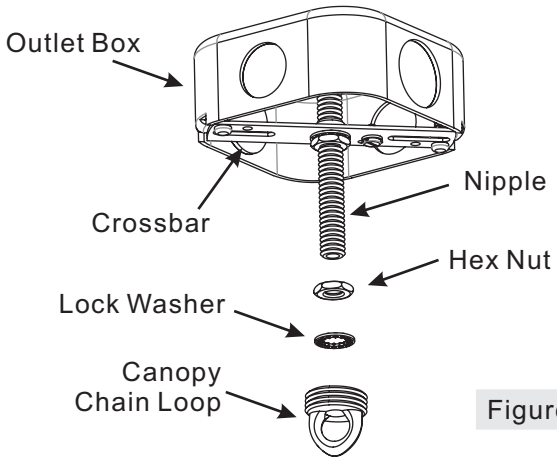

Figure 4

STEP 5 – Assemble Ceiling Canopy

A. Push the Ceiling Canopy (H) upward over the Outlet Box. Thread the Canopy Lock Ring (F) onto the Canopy Chain Loop (E) and tighten until snug to secure the Ceiling Canopy (H).

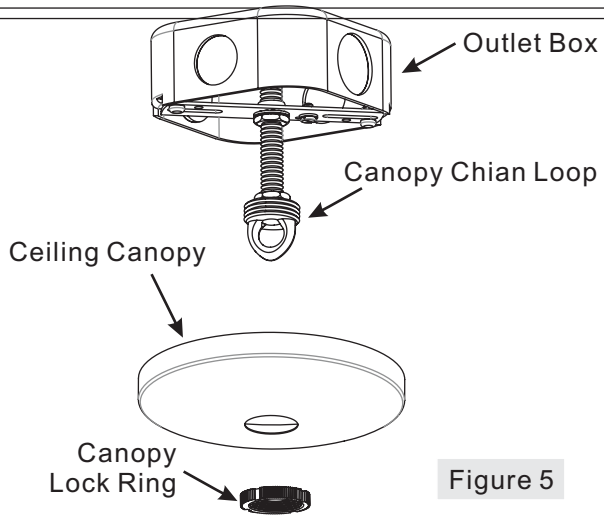

Figure 5

Thank you for purchasing a Quoizel product.
Need assistance with parts or assembly? Call Quoizel customer service at 1-631-273-2700
or visit us on-line at www.quoizel.com

©2013 Quoizel Inc.

May 2013

QUOIZEL
6 CORPORATE PARKWAY
GOOSE CREEK, SC. 29445
www. quoizel. com

Assembly Instruction Sheet #IS- NY1178P
For Style NY1178P

STEP 6 – Attach Fixture Chain to Canopy Chain Loop and Fixture Loop

A. Adjust the Fixture Chain (G) to your desired length by removing the links if needed. You may need to use plier to open the chain links. If so, put a cloth over the chain to protect the finish from the pliers.
B. Attach one end of the Fixture Chain (G) onto the Canopy Chain Loop (E) and then attach the other end of the Fixture Chain (G) onto the Fixture Loop (I) on the top of the fixture.

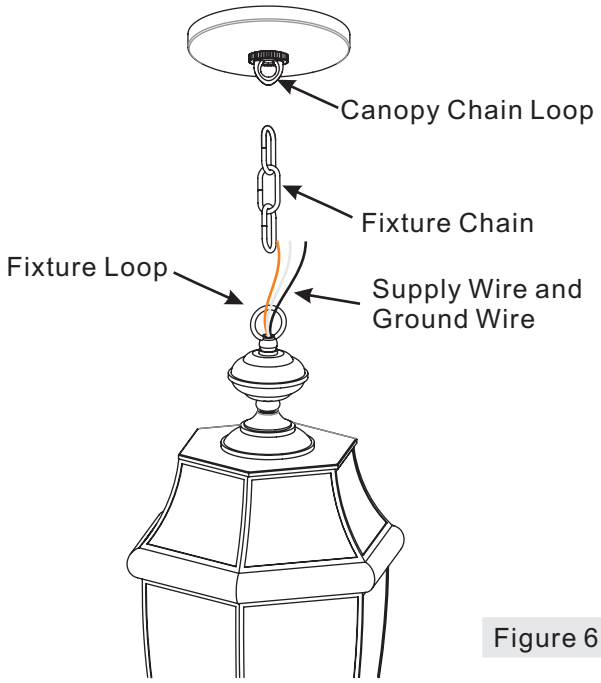

Figure 6

STEP 7 – Pass Supply Wires through Fixture Chain

A. Pull the Supply Wires and Ground Wire up through the Fixture Chain (G) alternating links. Push the wires up through the Canopy Chain Loop (E) into the outlet box.

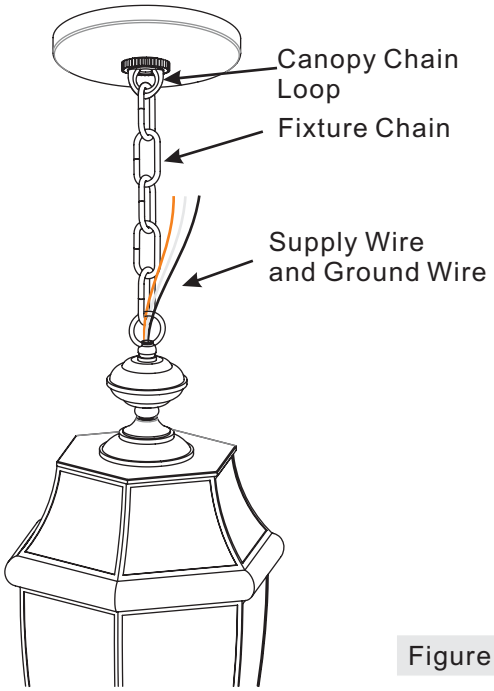

Figure 7

Thank you for purchasing a Quoizel product.
Need assistance with parts or assembly? Call Quoizel customer service at 1-631-273-2700
or visit us on-line at www.quoizel.com

©2013 Quoizel Inc.

May 2013

QUOIZEL
6 CORPORATE PARKWAY
GOOSE CREEK, SC. 29445
www. quoizel. com

Assembly Instruction Sheet #IS- NY1178P
For Style NY1178P

STEP 8 – Make Wire Connections

A. Un-thread the Canopy Lock Ring (F) and slide Canopy Lock Ring (F) and Ceiling Canopy (H) down the Fixture Chain (G).
B. Push all slack fixture wire through Canopy Chain Loop (E) into Outlet Box. Trim excess fixture wire leaving a minimum of 6 inch. Hanging out of the Outlet Box.
C. Use standard wire connectors to make all wire connections. (Connectors are not included with fixture.) Strip and prepare wire ends according to instructions supplied with connectors.
D. Connect White Supply Wire from the Outlet Box to White Wire from fixture.
E. Connect Black (or Red) Supply Wire from the Outlet Box to Black Wire from fixture.
F. Connect Ground Wire from the Outlet Box to Ground Wire from fixture.
G. Twist connectors until wires are tightly joined together.
H. Wrap each connection with approved electrical tape and carefully stuff all the connected wires into the Outlet Box.
G. Re-attach the Ceiling Canopy (H) as shown in Step 5.

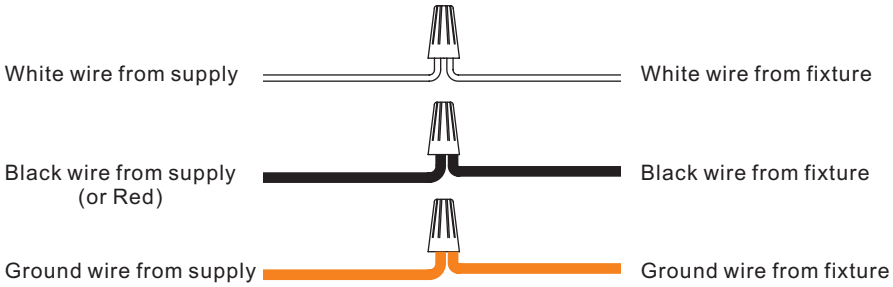

Figure 8

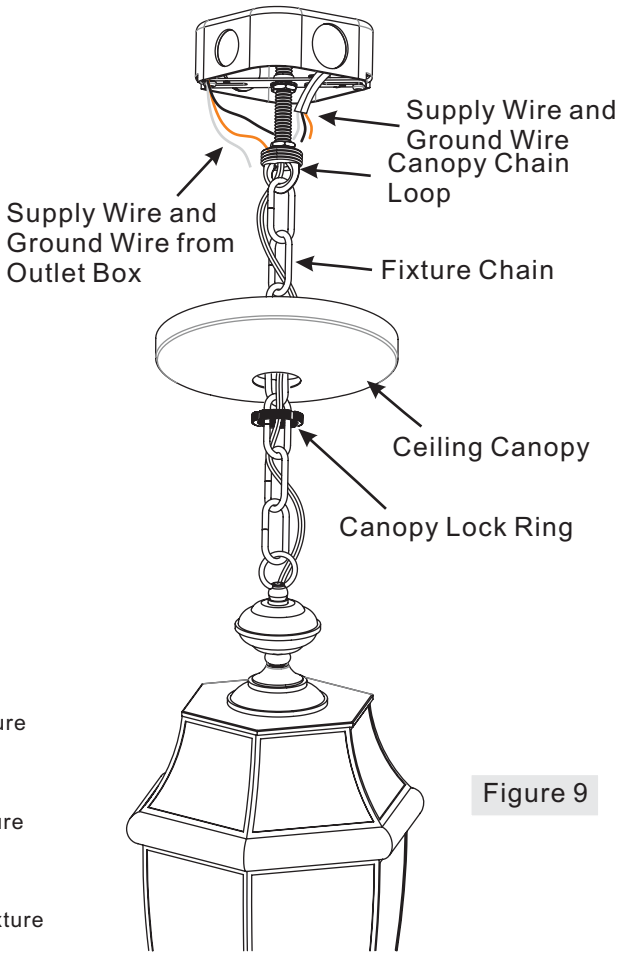

Figure 9

STEP 9 – Attach Candle Cover to Socket Assembly

A. Place the Candle Cover (K) over the Socket properly.

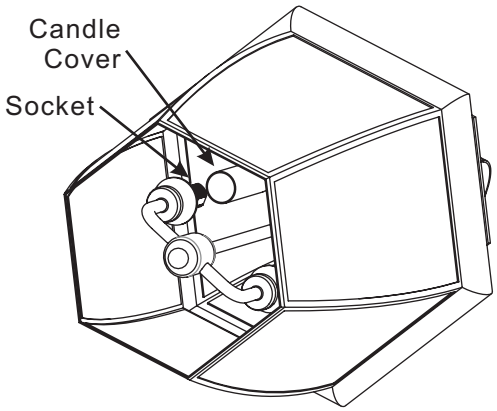

Figure 10

Thank you for purchasing a Quoizel product.
Need assistance with parts or assembly? Call Quoizel customer service at 1-631-273-2700
or visit us on-line at www.quoizel.com

©2013 Quoizel Inc.

May 2013

QUOIZEL
6 CORPORATE PARKWAY
GOOSE CREEK, SC. 29445
www. quoizel. com

Assembly Instruction Sheet #IS- NY1178P
For Style NY1178P

STEP 10 – Install Bulb

A. This fixture uses standard bulb with a candelabra screw base. Maximum 60 watts.
B. Place the bulb from the bottom of the glass frame. Insert bulb and screw snugly into place.

Your fixture is now assembled and ready to use.
Enjoy!

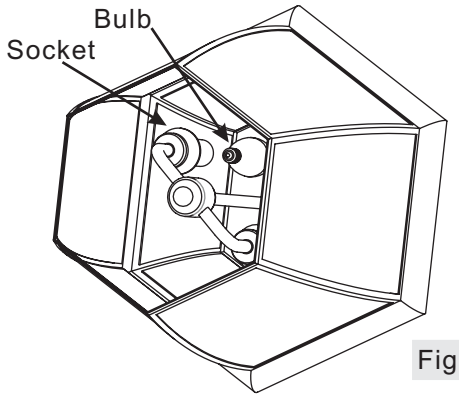

Figure 11

Thank you for purchasing a Quoizel product.
Need assistance with parts or assembly? Call Quoizel customer service at 1-631-273-2700
or visit us on-line at www.quoizel.com

©2013 Quoizel Inc.

May 2013