QUOIZEL
6 CORPORATE PARKWAY
GOOSE CREEK, SC. 29445
www. quoizel. com

Quoizel, Inc.
6 Corporate Parkway
Goose Creek, SC
29445

Customer Service
Phone 631.273.2700
Fax 631.231.7102
www.quoizel.com

Assembly Instruction Sheet #IS-SPH5018PN
For Style SPH5018PN

Tools Required: Flathead screwdriver, Phillips screwdriver, pliers, wire cutters, wire strippers, electrical tape, safety glasses.

Bulb Recommended: (18) Medium Base Bulbs 100W Maximum

Estimated Assembly Time: 35-40 minutes

Preparation: Identify and inspect all parts before beginning installation. Check package content list and diagrams below to be sure all parts are present. If any parts are missing or damaged, do not attempt to assemble, install, or operate the fixture. Contact customer service for replacement parts.

Warnings and Cautions

Turn off electricity at circuit breaker or main fuse box before installation. Consult a licensed electrician if in doubt.

These instructions are provided for your safety. It is very important you read them completely before installing the fixture. We strongly recommend that a licensed, professional electrician perform the installation.

Disconnect fixture from power source before replacing bulbs. Make sure bulbs are given sufficient time to cool before removal. Do not subject glass parts to any shock while in operation or shattering may result.

Thank you for purchasing a Quoizel product.
Need assistance with parts or assembly? Call Quoizel customer service at 1-631-273-2700
or visit us on-line at www.quoizel.com

c 2013 Quoizel Inc.

January 2013

SPH5018PN
FINISH: PALLADIAN BRONZE

NOTE: SIX LIGHTS SHOWN FOR ILLUSTRATION PURPOSES ONLY.

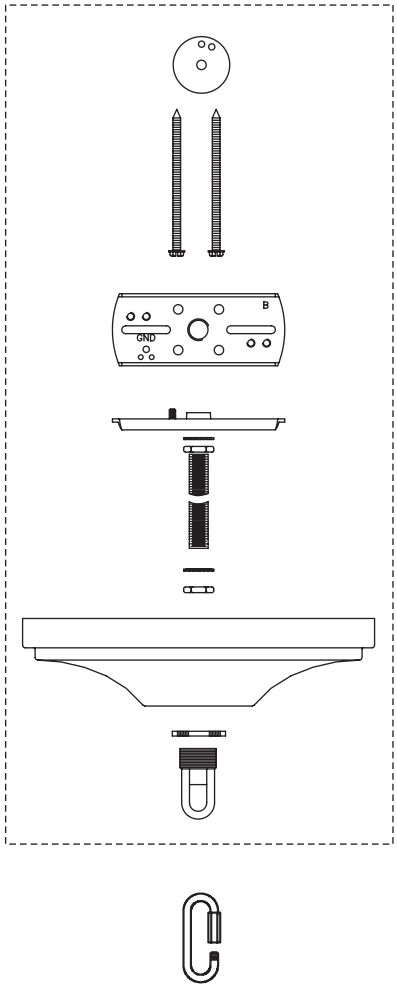

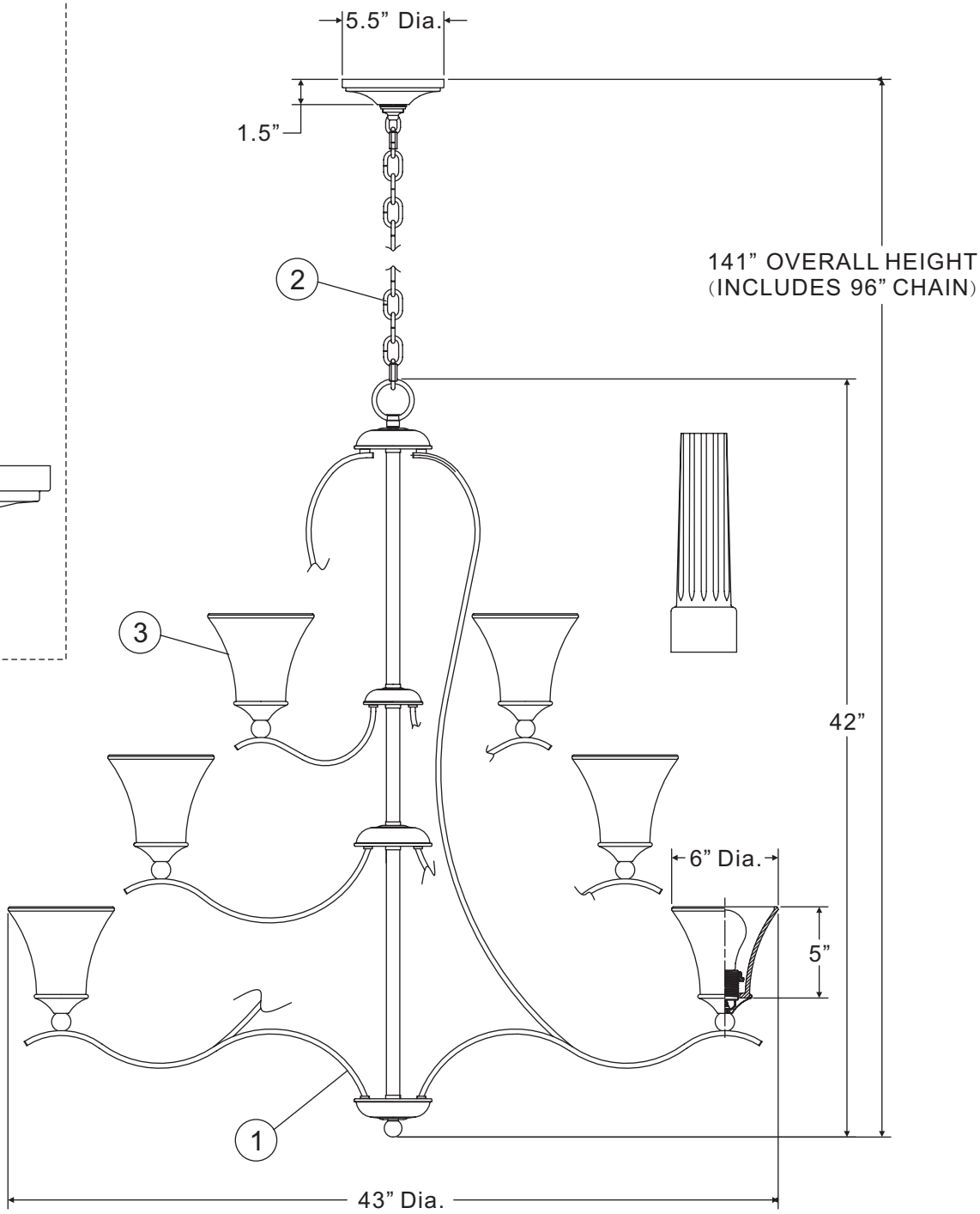

(18) Medium Base Bulbs
(Not Supplied)

NOTE: ALL DIMENSIONS ARE ROUNDED UP TO THE NEAREST 1/2″

NO.	PART NUMBER	REPLACEMENT PART DESCRIPTION	REQ.
1	15018PNSPH	BASE PALLADIAN BRONZE SPH5018PN	1
2	M451CHPN	CHAIN PALLADIAN BRONZE 4.5MMX4’	1
3	G2487SH	ETCHED GLASS PAINTED WHITE 6"D	18

QUOIZEL
6 CORPORATE PARKWAY
GOOSE CREEK, SC. 29445
www. quoizel. com

Assembly Instruction Sheet #IS-SPH5018PN
For Style SPH5018PN

Package Contents

Part	Description	Quantity
A	Crossbar	1 pc.
B	Mounting Screw	2 pcs.
C	Nipple	1 pc.
D	Lock Washer	2 pcs.
E	Hex Nut	2 pcs.
F	Ceiling Canopy	1 pc.
G	Canopy Chain Loop	1 pc.
H	Canopy Lock Ring	1 pc.
I	Quick Link	2 pcs.
J	Fixture Chain	1 pc.
K	Tuck Washer	1 pc.
L	Fixture Loop	1 pc.
M	Socket Collar	18 pcs.
N	Shade	18 pcs.
O	Socket Assembly	1 pc.
P	Socket Collar Tool	1 pc.

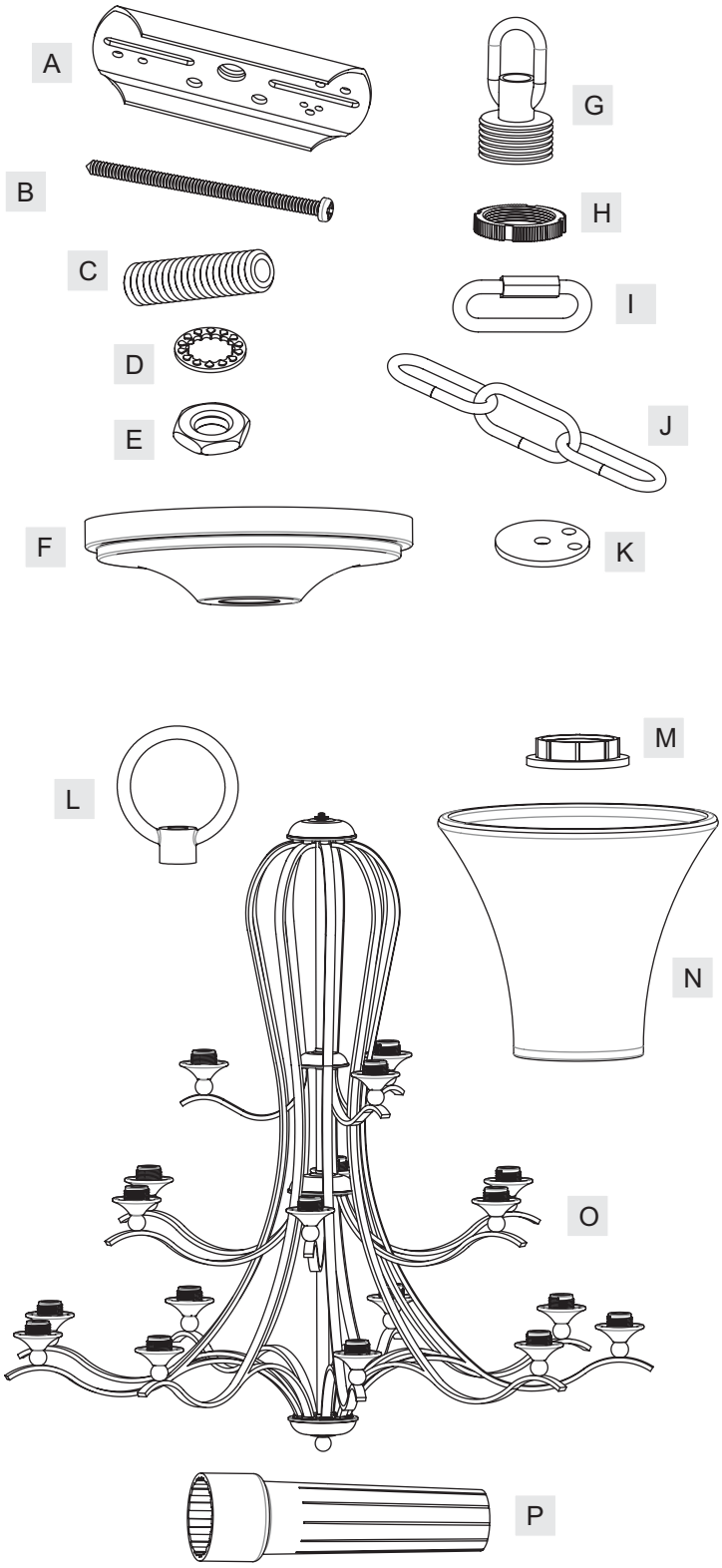

Thank you for purchasing a Quoizel product.
Need assistance with parts or assembly? Call Quoizel customer service at 1-631-273-2700
or visit us on-line at www.quoizel.com

c 2013 Quoizel Inc.

January 2013

QUOIZEL
6 CORPORATE PARKWAY
GOOSE CREEK, SC. 29445
www. quoizel. com

Assembly Instruction Sheet #IS-SPH5018PN
For Style SPH5018PN

STEP 1 – Assembly the Fixture Loop

A. Refer to the Socket Orientation, unfold the Support Arms of the Socket Assembly (O) to proper locations.
B. Thread the Fixture Loop (L) onto the nipple on the top center of the Socket Assembly (O). Hand tighten until snug.

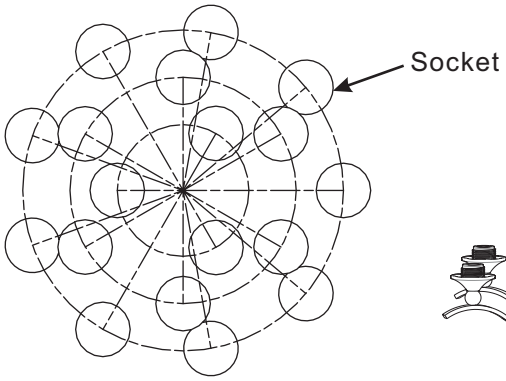

SOCKET ORIENTATION

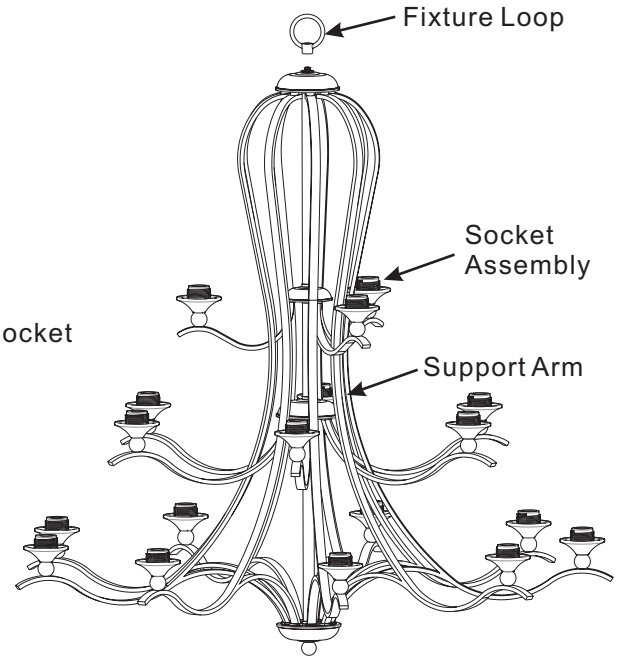

Figure 1

STEP 2 – Attach Nipple to Crossbar

A. Thread one Hex Nut (E) onto top end of the Nipple (C).
B. Place one Lock Washer (D) over the top end of the Nipple (C) and then thread the Nipple (C) into the center hole of the Crossbar (A). Hand tighten until snug.
C. Using pliers, thread the Hex Nut (E) against the Crossbar (A) and hand tighten until snug.

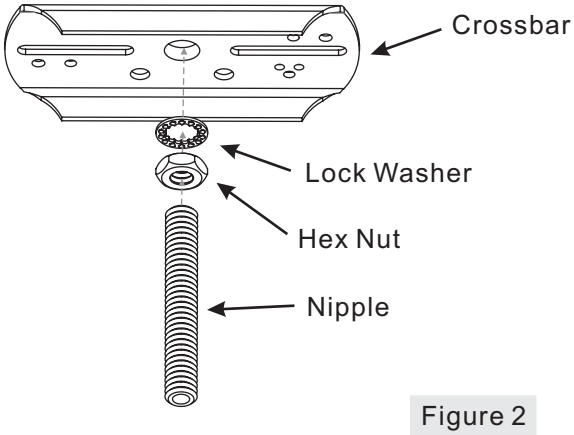

Figure 2

Thank you for purchasing a Quoizel product.
Need assistance with parts or assembly? Call Quoizel customer service at 1-631-273-2700
or visit us on-line at www.quoizel.com

c 2013 Quoizel Inc.

January 2013

QUOIZEL
6 CORPORATE PARKWAY
GOOSE CREEK, SC. 29445
www. quoizel. com

Assembly Instruction Sheet #IS-SPH5018PN
For Style SPH5018PN

STEP 3 – Attach Crossbar to Outlet Box

A. Drill a 5/8" diameter clearance hole on the top inside center of the Outlet Box and through the Structural Support Member.
B. Place Crossbar (A) onto the Outlet Box and line up Mounting Holes with a set of holes on Crossbar (A).
C. Thread Outlet Box Screws into the Mounting Holes on the Outlet Box and tighten until snug to secure the Crossbar.
D. Using a screwdriver, thread Mounting Screws (B) into the Structural or Bridging Member and tighten until snug.

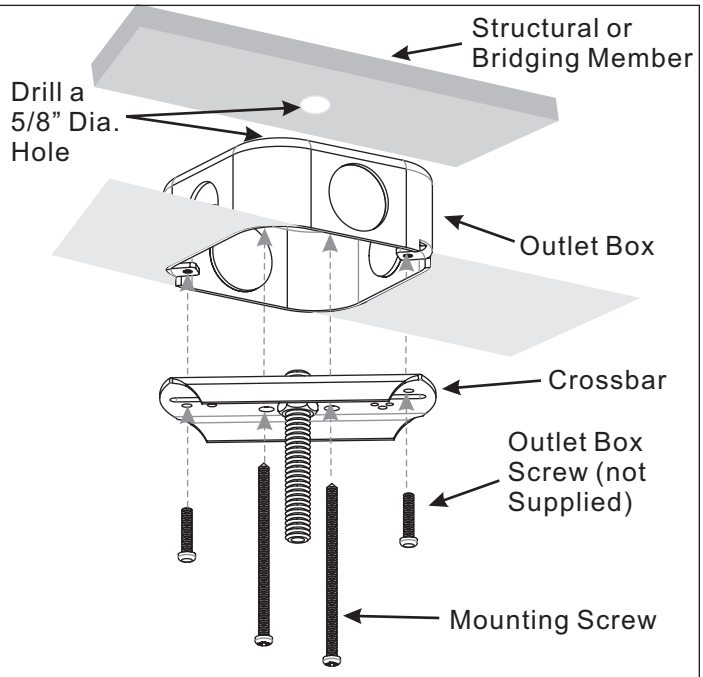

Figure 3

STEP 4 – Attach Canopy Chain Loop to Nipple

A. Thread another Hex Nut (E) onto the end of the Nipple (C).
B. Place the Lock Washer (D) over the end of the Nipple (C) and then thread the Canopy Chain Loop (G) onto the end of the Nipple (C).
C. Using pliers, thread the Hex Nut (E) against the Canopy Chain Loop (G) and hand tighten until snug.

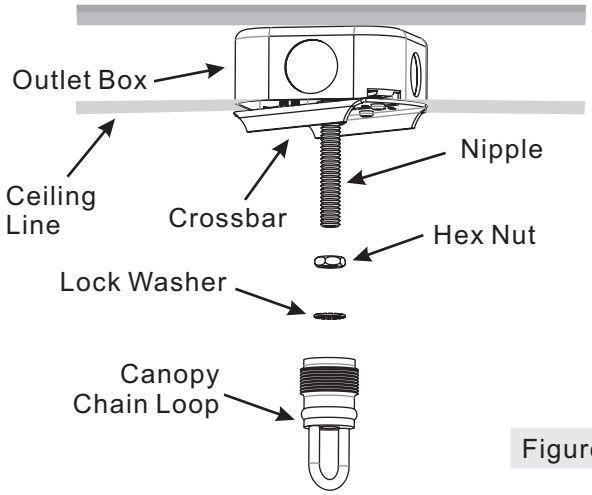

Figure 4

Thank you for purchasing a Quoizel product.
Need assistance with parts or assembly? Call Quoizel customer service at 1-631-273-2700
or visit us on-line at www.quoizel.com

c 2013 Quoizel Inc.
January 2013

QUOIZEL
6 CORPORATE PARKWAY
GOOSE CREEK, SC. 29445
www. quoizel. com

Assembly Instruction Sheet #IS-SPH5018PN
For Style SPH5018PN

STEP 5 – Assemble Ceiling Canopy

A. Push the Ceiling Canopy (F) upward over the Outlet Box. Thread the Canopy Lock Ring (H) onto the Canopy Chain Loop (G) and tighten until snug to secure the Ceiling Canopy (F).

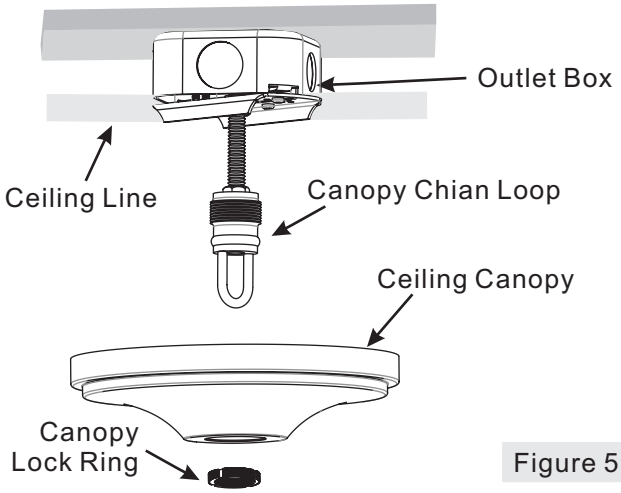

Figure 5

STEP 6 – Attach Fixture Chain to Canopy Chain Loop and Fixture Loop

A. Adjust the Fixture Chain (J) to your desired length by removing the links if needed. You may need to use plier to open the chain links. If so, put a cloth over the chain to protect the finish from the pliers.
B. Attach one end of the Fixture Chain (J) onto the Canopy Chain Loop (G) with a Quick Link Connector (I) and then attach the other end of the Fixture Chain (J) onto the Fixture Loop on the top of the fixture with another Quick Link Conector (I).

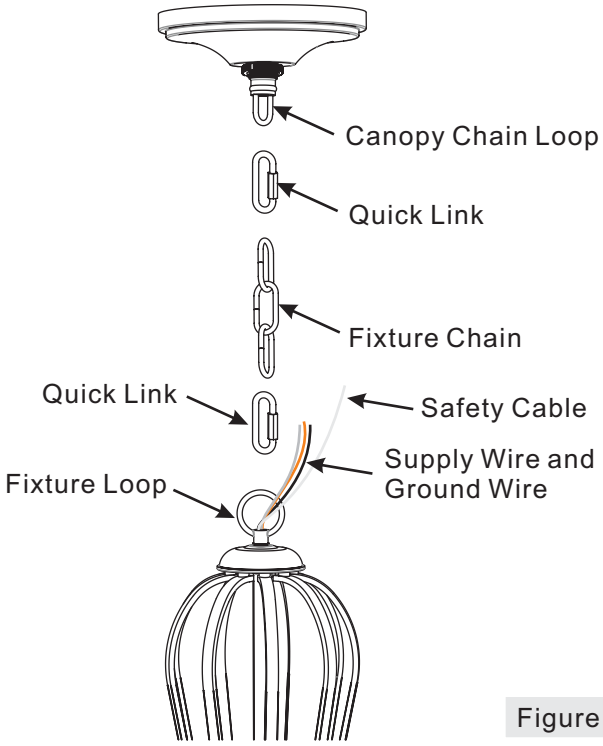

Figure 6

Thank you for purchasing a Quoizel product.
Need assistance with parts or assembly? Call Quoizel customer service at 1-631-273-2700
or visit us on-line at www.quoizel.com

c 2013 Quoizel Inc.
January 2013

QUOIZEL
6 CORPORATE PARKWAY
GOOSE CREEK, SC. 29445
www. quoizel. com

Assembly Instruction Sheet #IS-SPH5018PN
For Style SPH5018PN

STEP 7 – Pass Supply Wires through Fixture Chain

A. Pull the Supply Wires, Ground Wire and Safety Cable up through the Fixture Chain (J) alternating links. Push the wires and Safety Cable up through the Canopy Chain Loop (G) into the outlet box.

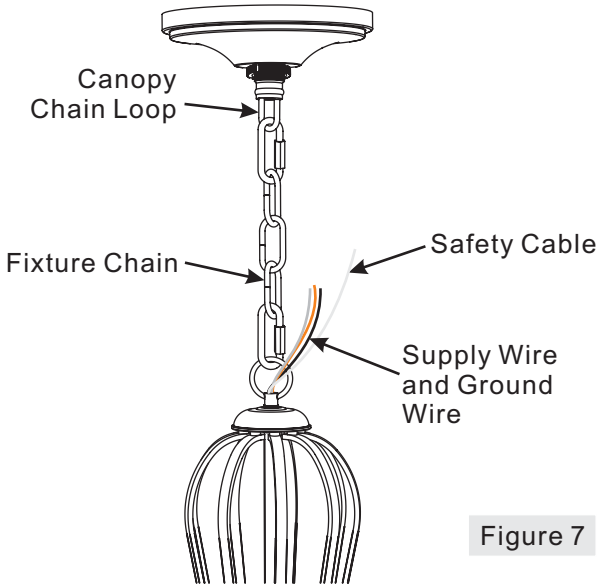

Figure 7

STEP 8 – Install Safety Cable

A. Un-thread the Canopy Lock Ring (H) and slide Canopy Lock Ring (H) and Ceiling Canopy (F) down the Fixture Chain (J).
B. Push all slack Safety Cable through Canopy Chain Loop (G), Nipple (C) and Outlet Box.
C. Pull all of the Safety Cable up through the Center Hole of the Tuck Washer (K).
D. Push the Cable down through the 12 O'clock Hole. Leaving ½"of slack.
E. Push the Cable up through the 1 O'clock Hole and tuck it under the cable between the Center Hole and the 12 O'clock Hole.
F. Pull all of excess cable through all of the holes until the Tuck Washer is very close to the Structural or Bridging Member. Remove as much slack as possible out of the Tuck Washer. About ½"of slack between Tuck Washer and the hole is acceptable.

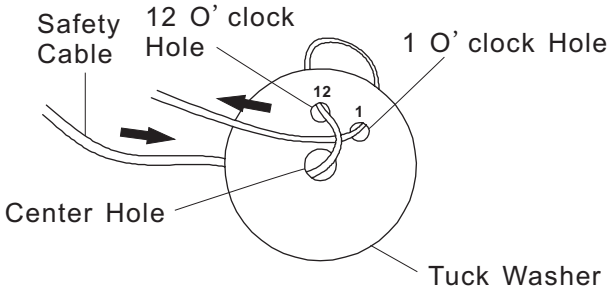

Figure 9

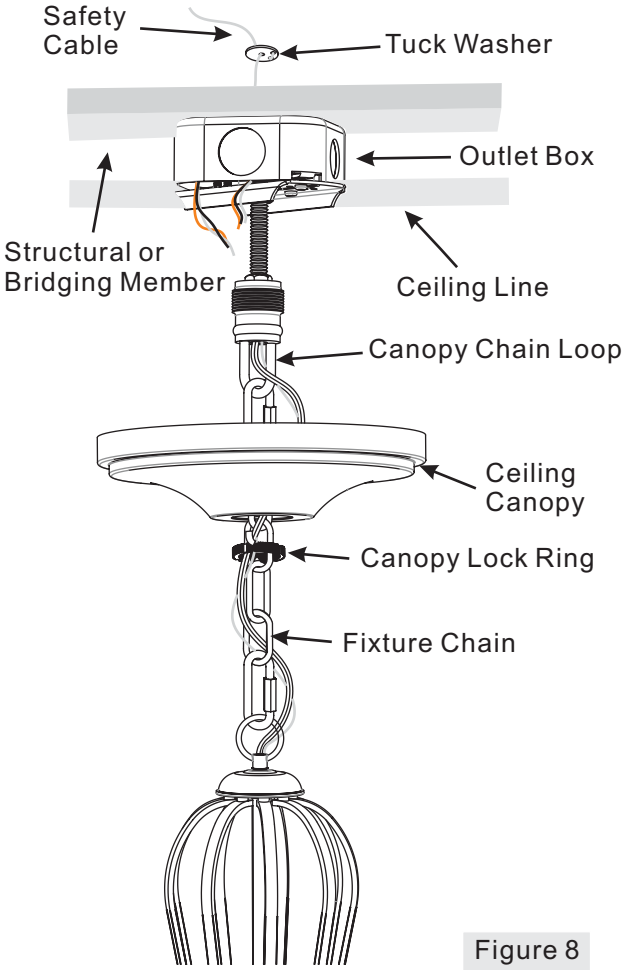

Figure 8

Thank you for purchasing a Quoizel product.
Need assistance with parts or assembly? Call Quoizel customer service at 1-631-273-2700
or visit us on-line at www.quoizel.com

c 2013 Quoizel Inc.

January 2013

QUOIZEL
6 CORPORATE PARKWAY
GOOSE CREEK, SC. 29445
www. quoizel. com

Assembly Instruction Sheet #IS-SPH5018PN
For Style SPH5018PN

STEP 9 – Make Wire Connections

A. Push all slack fixture wire through Canopy Chain Loop (E) into Outlet Box. Trim excess fixture wire leaving a minimum of 6 inch. Hanging out of the Outlet Box.
B. Use standard wire connectors to make all wire connections. (Connectors are not included with fixture.) Strip and prepare wire ends according to instructions supplied with connectors.
C. Connect White Supply Wire from the Outlet Box to White Wire from fixture.
D. Connect Black (or Red) Supply Wire from the Outlet Box to Black Wire from fixture.
E. Connect Ground Wire from the Outlet Box to Ground Wire from fixture.
F. Twist connectors until wires are tightly joined together.
G. Wrap each connection with approved electrical tape and carefully stuff all the connected wires into the Outlet Box.
H. Re-attach the Ceiling Canopy (F) as shown in Step 5.

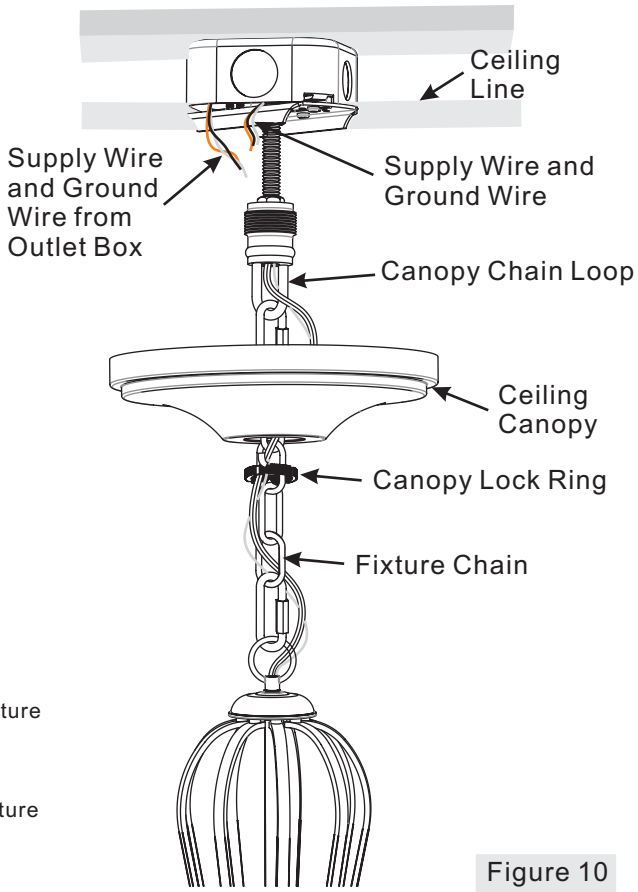

Figure 10

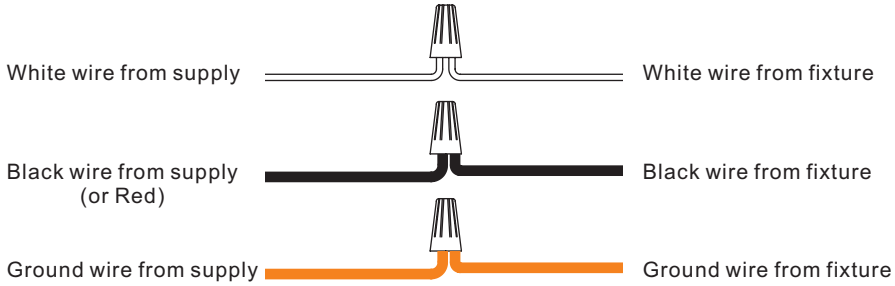

Figure 11

STEP 10 – Install Shade

A. Place the Shade (N) over the Socket. By using the Socket Collar Tool (P), thread the Socket Collar (M) onto the Socket and hand tighten until snug.

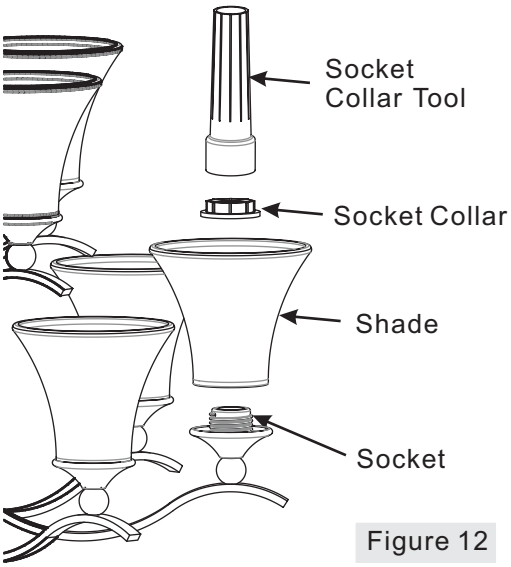

Figure 12

Thank you for purchasing a Quoizel product.
Need assistance with parts or assembly? Call Quoizel customer service at 1-631-273-2700
or visit us on-line at www.quoizel.com

c 2013 Quoizel Inc.
January 2013

QUOIZEL
6 CORPORATE PARKWAY
GOOSE CREEK, SC. 29445
www. quoizel. com

Assembly Instruction Sheet #IS-SPH5018PN
For Style SPH5018PN

STEP 11 – Install Bulb

A. This fixture uses standard bulb with medium base . Maximum 100 watts.
B. Insert bulb and screw snugly into place.

Your fixture is now assembled and ready to use. Enjoy!

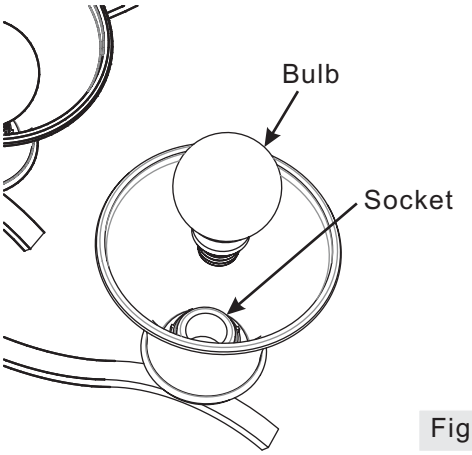

Figure 13

Thank you for purchasing a Quoizel product.
Need assistance with parts or assembly? Call Quoizel customer service at 1-631-273-2700
or visit us on-line at www.quoizel.com

c 2013 Quoizel Inc.

January 2013