Wall Mount Fixture
Installation and Wiring Instructions

NOTE:ALWAYS TURN POWER OFF BEFORE INSTALLING LIGHTING FIXTURES!

IMPORTANT:YOU SHOULD USE A QUALIFIED ELECTRICIAN TO INSTALL THIS FIXTURE.

installation (see Fig. A)

1. Disconnect power at main electrical panel before installation.
2. Pull Supply Wires through larger hole in Back Plate(hole has smooth edge).
3. Attach through cross bar to Outlet Box using Box Screws provided with Outlet Box.For additional stability on longer fixtures,install Mounting Screws into appropriate Fasteners (Fasteners not provided)
4. Follow wiring instructions carefully(listed below).
5. Position coverplate over cross bar,alligning Studs with Coverplate holes and secure with Finial.
6. Put the glass shade into cup.
7. Install the glass and secured with socket ring.

Wiring (see Fig. B)

1. Split the conductors of the fixture wire about 4 inches. Being carefull not to expose any of the wire inside of the insulation.
2. Connect the fixture ground wire to the outlet box ground wire using wirenut(not provided).Connect outlet box ground wire to mounting plate with GREEN hex-head ground screw to tapped hole in cross bar marked"GND"
3. Connect the half of the fixture wire that is white,marked,or has a ribbed surface to the outlet box supply wire(WHITE). Connect the other half of the fixture wire that is black, unmarked.or has a smooth surface to the outlet box supply wire (BLACK or RED).Use wirenuts provided.
4. Spread the electrical splices so that the black wire are on one side of the outlet box and the white wire are on the other side.

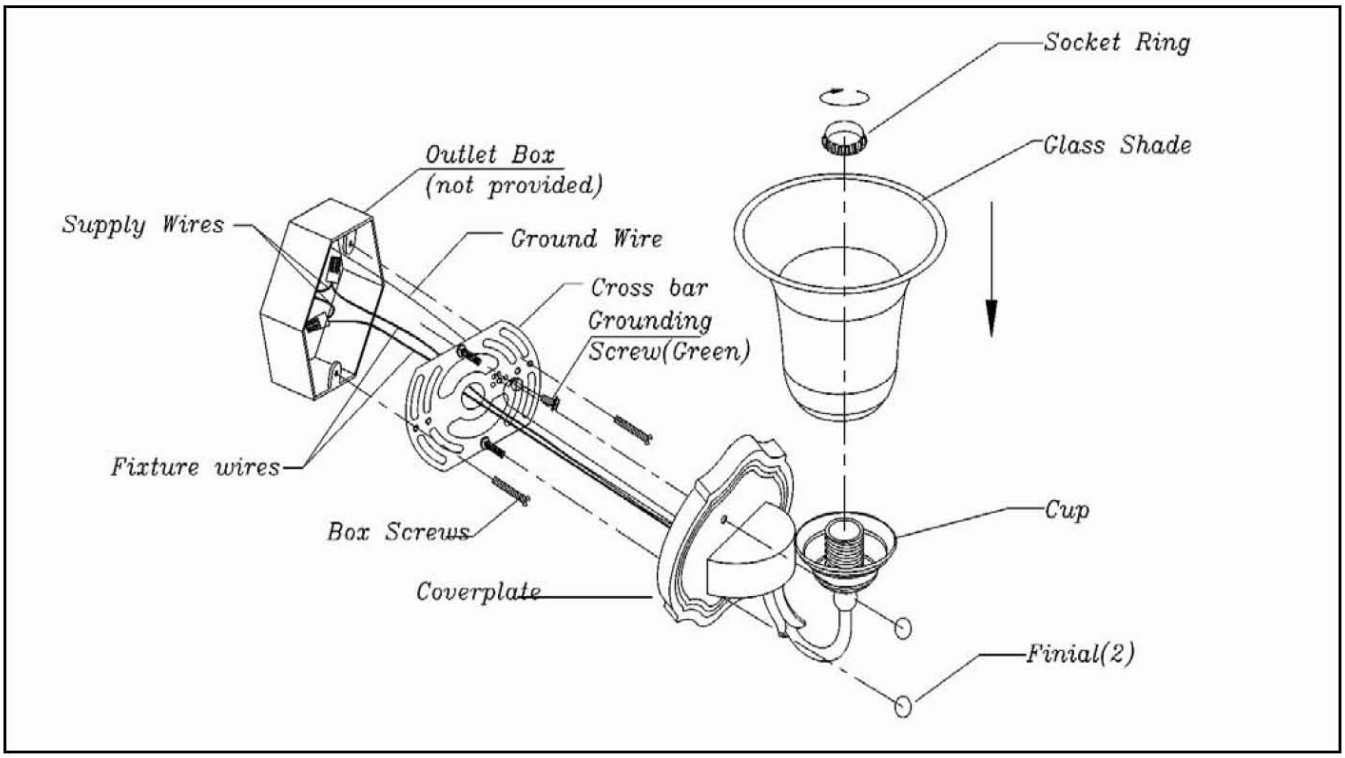

Fig. A

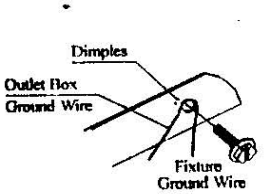

Connect Black or Red House Wire to:	Connect White House Wire to:
Black	White
Parallel cord-SPTI & II (round & smooth)	Parallel cord-SPTI & II (square & ridged)
Clear, Brown, Gold or Black (without tracer)	Clear, Brown, Gold or Black (with tracer)
Insulated Wire (Other than GREEN) with copper conductor	Insulated Wire (Other than GREEN) with silver conductor

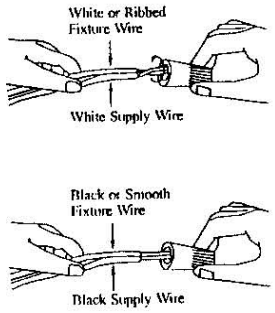

Fig. B

23131 , 23133 , 23134