ARTERIORS®

As ARTERIORS enters its 30th year, I find myself extremely proud of our growth and excited about our future. As the marketplace continues to change and buying habits shift, we are more determined than ever to surpass your expectations not only with our designs but with our service.

To that end, I am very excited to announce that beginning January 1st, 2017 *we are committed to stocking 90% of our assortment, all of which canship within 72 hours.* We are able to do this in large part because our customer channels are so diversified, smoothing out the selling and buying cycles. By cultivating the relationships we have with our niche Retailers and Residential designers, Contract designers and purchasers, Lighting Showrooms and International Distributors we are able to fuel their growth which in turn fuels ours, providing us the opportunity to reinvest in Arteriors.

We've also reinvested in a new and improved Website. This beautiful redesign makes it easier than ever to browse all things Arteriors. From a streamlined shopping experience to enhanced product images, the new site is completely optimized making your online shopping experience better than ever.

After all these years, I'm still having fun and I hope you are too. Thanks as always for your loyalty, support and suggestions—you push us to be better and that is a challenge we fully embrace.

Best Regards,

The many faces of ARTERIORS

we are BOUTIQUE RETAIL AND RESIDENTIAL DESIGN

With 90% of our 1200 products in stock, the ability to ship within 72 hours and a commitment to introduce at least 400 fashion-forward products each year, Arteriors has become a go-to resource for discerning designers and niche retailers across the country. From urban to coastal… glam to organic…classic to avant-garde you will find designs inspired by fashion, architecture and travel.

we are LIGHTING SHOWROOMS

From the understated to the unexpected, Arteriors offers an extraordinary selection of artisanal, luxury lighting designs in a variety of materials, styles and finishes – including table lamps, floor lamps, chandeliers, pendants and sconces. With 90% of our eclectic collection in stock and ready to ship in 72 hours, Arteriors is the solution when your architects, designers, builders and consumers are looking for on-trend lighting designs.

we are GLOBAL

While Arteriors has been a mainstay in American design for many years, a recent focus on international distribution has expanded our reach to more countries than ever. Arteriors currently offers stocking and distribution in Europe, Africa, Asia-Pacific, Australia, North America and South America, with approved lighting certifications in 46 countries.

CIFF · Shanghai

MAISON & OBJET · Paris

we are CONTRACT

Arteriors' Contract channel brings our eclectic assortment of sophisticated designs to many of the most beautiful and diverse commercial spaces across the globe. Our ability to Custom Design, Value Engineer or Modify Stock provides designers and purchasers across the globe the opportunity to leverage Arteriors' elevated design and artisanal aesthetic to almost any commercial design project, no matter the scope.

of our products are **IN-STOCK**
and ship within **72 HOURS**

CONTENTS

2 *lamps* TANNER & KENZIE

80 *chandeliers·pendants·sconces*

192 *furniture·upholstery*

282 *wall decor*

316 *accessories*

384 *index*

90

PERCENT IN-STOCK

Ships within 72 hours

LAMPS

TANNER & KENZIE

Arteriors may have started as an accessory company 30 years ago, but we soon became known for fashion forward lamps with beautiful handmade shades and artful details. It is this attention to detail, diversity of materials, bold approach to scale and artisan sensibilities that make our lamps favorites of designers, boutique retailers and lighting showrooms worldwide. The fact that we maintain stock on 90% of our assortment and ship within 72 hours, places us even further ahead of our competitors. Arteriors is a go-to resource if you are looking for lamps.

A

A **FRYE LAMP**
Clear Crystal/Vintage Brass
Ivory Microfiber Shade/White Microfiber Lining
H: 23.5" x 16.5"/9.5" Rect
H: 60 x 42/24 Rect cm
Max Watts: 150 3way
*French wire
49710-665 MSRP $900

B

C

B **ELI LAMP**
Clear Crystal/Antique Brass
Ivory Microfiber Shade/
Matching Lining
H: 18.5" x 15"/8" Rect
H: 47 x 38/20 Rect cm
Max Watts: 100 On/Off
*finish may vary
*line switch
49936-400 MSRP $1,050

C **ELIZA LAMP**
Clear Crystal/Antique Brass
Ivory Microfiber Shade/
Matching Lining
H: 20.5" x 15"/8" Rect
H: 52 x 38/20 Rect cm
Max Watts: 100 On/Off
*finish may vary
*line switch
49937-400 MSRP $840

D **NORMAN LAMP**
Clear Glass/Antique Brass
Ivory Microfiber Shade/
White Microfiber Lining
H: 32" x 17" Dia
H: 81 x 43 Dia cm
Max Watts: 150 3way
49027-598 MSRP $660

E **DALE LAMP**
Clear Glass/Antique Brass
Ivory Microfiber Shade/
White Microfiber Lining
H 30" x 18" Dia
H: 76 x 46 Dia cm
Max Watts: 150 3way
*French wire
49716-768 MSRP $690

D

E

A

B

C

A **EASTON LAMP**
Polished Brass/Matte Brass
Black Paper Shade/Gold Foil Lining
H: 25" x 17" Dia
H: 64 x 43 Dia cm
Max Watts: 150 3way
42086-725 MSRP $750

B **EASTON LAMP**
Polished Brass/Matte Brass
White Paper Shade/Gold Foil Lining
H: 25" x 17" Dia
H: 64 x 43 Dia cm
Max Watts: 150 3way
42086-984 MSRP $750

C WINDSOR SMITH COLLECTION
ELIS LAMP
Moss Gray Suede/Polished Brass
Ivory Microfiber Shade/Gold Foil Lining
H: 31.5" x 19"/13" Rect
H: 80 x 48/33 Rect cm
Max Watts: 150 3way
*suede may vary
DS12010-111 MSRP $2,085

D **DELORES LAMP**
Matte Brass/Polished Brass
Ivory Microfiber Shade/Matching Lining
H: 24.5" x 13" Sq
H: 62 x 33 Sq cm
Max Watts: 150 3way
44018-887 MSRP $900

E WINDSOR SMITH COLLECTION
LARES LAMP
Polished Brass
Cloud Gray Microfiber Shade/Matching Lining
H: 28" x 18" Dia
H: 71 x 46 Dia cm
Max Watts (per socket): 60 On/Off
*pull chain/double socket
DS44001-145 MSRP $1,350

F **NAVARRO LAMP**
Polished Brass/Black Marble
Ivory Microfiber Shade/Matching Lining
H: 29.5" x 20"/9" Rect
H: 75 x 51/23 Rect cm
Max Watts: 100 3way
*marble may vary
44148-972 MSRP $660

G **DUSTIN LAMP**
Black Marble/White Marble/Antique Brass
Ivory Microfiber Shade/White Microfiber Lining
H: 30" x 13" Sq
H: 76 x 33 Sq cm
Max Watts: 150 3way
*marble may vary
49713-715 MSRP $840

D

E

F

G

A

B

C

A **MANDEL LAMP**
Smoke Luster Glass/Antique Brass
Taupe Sheer Shade/Matching Lining
Max Watts: 150 3way
*finish may vary
H: 26" x 19" Dia
H: 66 x 48 Dia cm
44135-956 MSRP $750

B **ELLORY LAMP**
Antique Brass/Bronze/Antique Mirror
Black Paper Shade/Gold Foil Lining
H: 26" x 15"/9" Rect
H: 66 x 38/23 Rect cm
Max Watts: 150 3way
*finish may vary
42009-378 MSRP $1,050

C **DALTON LAMP**
Antique Brass
Light Beige Linen Shade/Matching Lining
H: 30.5" x 18"/10" Rect
H: 77 x 46/25 Rect cm
Max Watts (per socket): 60 Dimmer
*line switch/double socket
49850-504 MSRP $570

D WINDSOR SMITH COLLECTION
YAMATO LAMP
Antique Brass
Ivory Microfiber Shade/Matching Lining
H: 28.5" x 15.5" Sq
H: 72 x 39 Sq cm
Max Watts: 150 3way
DS44007-154 MSRP $1,485

E WINDSOR SMITH COLLECTION
KALYPSO LAMP
Antique Brass
Ivory Microfiber Shade/Matching Lining
H: 26.5" x 21" Dia
H: 67 x 53 Dia cm
Max Watts (per socket): 60 On/Off
*pull chain/double socket
DS44008-444 MSRP $1,410

F **ROOSEVELT LAMP**
Antique Brass/Clear Crystal
Ivory Microfiber Shade/Matching Lining
H: 34" x 18" Dia
H: 86 x 46 Dia cm
Max Watts: 150 3way
49946-269 MSRP $1,110

G **GARVEY LAMP**
Antique Brass/Clear Acrylic
Taupe Sheer Shade/Matching Lining
H: 30" x 15" Dia
H: 76 x 38 Dia cm
Max Watts: 150 3way
44141-434 MSRP $840

D

E

F

G

A

A **DEDRA LAMP**
Brushed Brass/Clear Crystal
Ivory Microfiber Shade/White Microfiber Lining
H: 39" x 22"/12" Oval
H: 99 x 56/30 Oval cm
Max Watts: 150 3way
49939-917 MSRP $1,050

B

B **EDEN LAMP**
Brushed Brass/Polished Brass/White Onyx
Ivory Microfiber Shade/White Microfiber Lining
H: 33" x 18"/10" Rect
H: 84 x 46/25 Rect cm
Max Watts: 150 3way
*onyx may vary
49938-912 MSRP $960

C

C **DAMIAN LAMP**
Brushed Brass/White Onyx
Ivory Microfiber Shade/White Microfiber Lining
H: 27.5" x 28"/15" Oval
H: 70 x 71/38 Oval cm
Max Watts: 150 3way
*onyx may vary
49943-925 MSRP $1,200

A

A **PADDOCK LAMP**
Antique Brass/White Onyx
Ivory Microfiber Shade/
White Microfiber Lining
H: 26" x 15.5"/8" Rect
H: 66 x 39/20 Rect cm
Max Watts: 150 3way
*onyx may vary
49948-268 MSRP $750

C

B

B **NOAH LAMP**
White Marble
Ivory Microfiber Shade/Matching Lining
H: 32.5" x 17" Dia
H: 83 x 43 Dia cm
Max Watts: 150 3way
*marble may vary
49025-219 MSRP $1,500

D

C **BRONX LAMP**
White Marble/Brass Clad
White Microfiber Shade/Gold Foil Lining
H: 19.5" x 14" Dia
H: 50 x 36 Dia cm
Max Watts: 150 3way
*clad and marble may vary
12446-803 MSRP $840

D **FARRELL LAMP**
White Onyx/Antique Brass
Ivory Microfiber Shade/
White Microfiber Lining
H: 28" x 15"/8" Rect
H: 71 x 38/20 Rect cm
Max Watts: 100 3way
*onyx may vary
49715-759 MSRP $900

E

F

E **CARSON LAMP**
Snow Marble/Vintage Brass
Ivory Microfiber Shade/Matching Lining
H: 24.5" x 16.5"/7.5" Rect
H: 62 x 42/19 Rect cm
Max Watts: 60 On/Off
*marble may vary
42328-798 MSRP $1,500

F **HERST LAMP**
Snow Marble/Vintage Brass
Ivory Microfiber Shade/Matching Lining
H: 23.5" x 14.5"/7.5" Rect
H: 58 x 37/19 Rect cm
Max Watts: 60 On/Off
*marble may vary
49931-511 MSRP $1,350

G **ELSA LAMP**
White Marble/Antique Brass
Ivory Microfiber Shade/
White Microfiber Lining
H: 31" x 15" Dia
H: 79 x 38 Dia cm
Max Watts: 150 3way
*marble may vary
49712-713 MSRP $840

H **SIDNEY LAMP**
Snow Marble/Antique Brass
Putty Microfiber Shade/Matching Lining
Adj. H: 31" - 34" x 15" Dia
Adj. H: 79 - 86 x 38 Dia cm
Max Watts: 60 On/Off
*pull chain/double socket
*marble may vary
49882-590 MSRP $1,500

G

H

A

B

A **DESIREE LAMP**
Sage Silveria Etched Glass/Clear Acrylic
Taupe Sheer Microfiber Shade/
Matching Lining
H: 26.5" x 18" Dia
H: 67 x 46 Dia cm
Max Watts: 150 3way
*finish may vary
17553-337 MSRP $480

B **LEOPARD SILVERIA LAMP**
Leopard Silveria Glass
Bronze Iridescent Sheer Shade/
Gold Foil Lining
H: 24" x 15" Dia
H: 61 x 38 Dia cm
Max Watts:150 3way
*finish may vary
44498-412 MSRP $465

C **ELROY LAMP**
Mercury Frost Glass/Antique Brass
Putty Microfiber Shade/Light Gray
Cotton Lining/Diffuser
H: 31" x 18" Dia
H: 79 x 46 Dia cm
Max Watts: 100 3way
*finish may vary
44070-320 MSRP $810

D **LUCIEN LAMP**
Midnight Glass/Antique Brass
Boulder Cotton Shade/White Cotton Lining
H: 30" x 17" Dia
H: 76 x 43 Dia cm
Max Watts: 150 3way
*finish may vary
44360-807 MSRP $780

C

D

E

F

E **DORSEY LAMP**
Champagne Luster Glass
Ivory Microfiber Shade/
White Microfiber Lining
H: 26.5" x 10"/8" Rect
H: 67 x 25/20 Rect cm
Max Watts: 150 3way
42016-395 MSRP $420

F **SIBLEY LAMP**
Smoke Luster Glass/Antique Brass
Ivory Microfiber Shade/Matching Lining
H: 26.5" x 17" Dia
H: 67 x 43 Dia cm
Max Watts: 150 3way
*finish may vary
42132-219 MSRP $600

G **CALLIE LAMP**
Smoke Luster Glass
Taupe Sheer Shade/Matching Lining
H: 26.5" x 16" Dia
H: 67 x 41 Dia cm
Max Watts: 150 3way
*finish may vary
44300-793 MSRP $660

H **SILVER CAMEL LAMP**
Distressed Mercury Glass/Antique Brass
Khaki Microfiber Shade/
Beige Leopard Microfiber Lining
H: 27.5" x 15" Dia
H: 70 x 38 Dia cm
Max Watts: 150 3way
*finish may vary
44449-149 MSRP $630

G

H

A

B

C

A **FERRIS LAMP**
Smoke Crystal/Champagne Crystal/
Antique Brass
Cloud Gray Microfiber Shade/
White Microfiber Lining
H: 28.5" x 18"/12" Rect
H: 72 x 46/30 Rect cm
Max Watts: 150 3way
49711-682 MSRP $1,050

B **MYA SMALL LAMP**
Smoke Bubble Glass/Clear Acrylic
Ivory Silk Pleated Shade/Matching Lining
H: 29" x 16" Dia
H: 74 x 41 Dia cm
Max Watts: 60 On/Off
49898-734 MSRP $660

C **MYA LAMP**
Smoke Bubble Glass/Clear Acrylic
Ivory Silk Pleated Shade/Matching Lining
H: 31.5" x 19" Dia
H: 80 x 48 Dia cm
Max Watts: 150 3way
49897-359 MSRP $1,095

D **DIANE LAMP**
Amber Luster Ombre/Clear Crackle Glass/
Antique Brass
Ivory Microfiber Shade/Matching Lining
H: 27.5" x 19" Dia
H: 70 x 48 Dia cm
Max Watts: 150 3way
*finish may vary
42027-454 MSRP $600

E **PHILOMENA LAMP**
Amber Crystal/Antique Brass
Ivory Microfiber Shade/
White Microfiber Lining
H: 27" x 18"/10" Oval
H: 69 x 46/25 Oval cm
Max Watts: 150 3way
49945-281 MSRP $900

F **FOLEY LAMP**
Champagne Crystal/Antique Brass
Ivory Microfiber Shade/Matching Lining
H: 33" x 15" Dia
H: 84 x 38 Dia cm
Max Watts: 150 3way
49714-720 MSRP $900

G **DENISE LAMP**
Amber Luster Ombre/Clear Crackle Glass/Antique Brass
Taupe Sheer Shade/White Microfiber Lining
H: 33.5" x 14" Dia
H: 85 x 36 Dia cm
Max Watts: 150 3way
*finish may vary
42026-414 MSRP $600

D

E

F

G

A

B

C

D

A **FOWLER LAMP**
Gold Leafed Wood
Ivory Microfiber Shade/White Microfiber Lining
H: 34" x 19" Dia
H: 86 x 48 Dia cm
Max Watts: 150 3way
*finish may vary
44000-516 MSRP $1,050

B **EMERY LAMP**
Natural Wood/Silver Leafed Wood
Ivory Microfiber Shade/White Microfiber Lining
H: 31.5" x 20" Dia
H: 80 x 51 Dia cm
Max Watts: 150 3way
*finish may vary
44001-566 MSRP $900

C **SHEENA LAMP**
Off-White Hide/Gold Leafed Accents
Ivory Microfiber Shade/Matching Lining
H: 29" x 18" Dia
H: 74 x 46 Dia cm
Max Watts: 150 3way
*hide may vary
16456-804 MSRP $1,050

D **BODEGA LAMP**
Distressed Whitewash Driftwood
White Linen Shade/Matching Lining/Diffuser
Adj. H: 29.5" - 35" x 14.5" Sq
Adj. H: 75 - 89 x 37 Sq cm
Max Watts: 150 3way
*finish and size may vary
15408-394 MSRP $600

E **MILLER LAMP**
Natural Horn
Boulder Cotton Shade/Matching Lining
H: 27" x 16" Dia
H: 69 x 41 Dia cm
Max Watts: 100 3way
*horn may vary
46755-923 MSRP $570

F **BERNARD LAMP**
Natural Horn/Polished Brass/Clear Acrylic
Ivory Microfiber Shade/White Microfiber Lining
H: 27.5" x 18"/10" Rect
H: 70 x 46/25 Rect cm
Max Watts: 100 3way
*horn may vary
46820-992 MSRP $900

G **BERNARD LAMP**
Natural Horn/Polished Brass/Clear Acrylic
Black Microfiber Shade/Gold Microfiber Lining
H: 27.5" x 18"/10" Rect
H: 70 x 46/25 Rect cm
Max Watts: 100 3way
*horn may vary
46820-458 MSRP $900

E

F

G

A

B

C

D

A **ANDERSON LAMP**
Antiqued Mercury Glass
Off-White Silk Shade/Matching Lining
H: 31" x 18" Dia
H: 79 x 46 Dia cm
Max Watts: 150 3way
*finish may vary
42522-913 MSRP $600

B **MELODY LAMP**
Clear Glass/Mercury Glass
Ivory Microfiber Shade/Matching Lining
H: 32.5" x 16" Dia
H: 83 x 41 Dia cm
Max Watts: 150 3way
*finish may vary
44109-838 MSRP $780

C **EDALINE LAMP**
Distressed Silver Leafed Glass
Ash Microfiber Shade/Matching Lining
H: 26" x 19" Dia
H: 66 x 48 Dia cm
Max Watts: 150 3way
*finish may vary
44105-272 MSRP $840

D **TORTOISE LAMP**
Silver Glass
Putty Microfiber Shade/Silver Foil Lining
H: 23" x 14.5" Dia
H: 58 x 37 Dia cm
Max Watts: 150 3way
*finish may vary
44469-153 MSRP $660

E

F

G

H

E **JOSS LAMP**
Smoke Luster Glass
Putty Microfiber Shade/Matching Lining
H: 30″ x 17″ Dia
H: 76 x 43 Dia cm
Max Watts: 150 3way
*finish may vary
46619-861 MSRP $630

F **ELLEN LAMP**
Mercury Luster Glass/Nickel Plate
Taupe Sheer Shade/Dark Silver Sheer Lining
H: 28″ x 18″ Dia
H: 71 x 46 Dia cm
Max Watts: 150 3way
*finish may vary
42682-480 MSRP $615

G **WALSH LAMP**
Antiqued Mercury Glass/Clear Acrylic
Ivory Microfiber Shade/Matching Lining
H: 28″ x 15″ Dia
H: 71 x 38 Dia cm
Max Watts: 150 3way
*finish may vary
46723-717 MSRP $690

H **WALTER LAMP**
Distressed Silver Glass/Nickel Plate
Ivory Microfiber Shade/Matching Lining
H: 27″ x 17″ Dia
H: 69 x 43 Dia cm
Max Watts: 150 3way
*finish may vary
46727-780 MSRP $780

A

B

C

D

A **RAVI LAMP**
Metallic Python Porcelain
Silver Sheer Shade/Matching Lining
H: 30.5" x 20"/9" Rect
H: 77 x 51/23 Rect cm
Max Watts: 150 3way
17100-262 MSRP $480

B **WINSLOW LAMP**
Metallic Python Porcelain/Clear Acrylic
Ash Microfiber Shade/White Microfiber Lining
H: 19" x 18"/11" Oval
H: 48 x 46/28 Oval cm
Max Watts: 150 3way
*finish may vary
17530-738 MSRP $540

C **RAVI LAMP**
Silver Splatter Porcelain
Ash Microfiber Shade/White Microfiber Lining
H: 30.5" x 20"/9" Rect
H: 77 x 51/23 Rect cm
Max Watts: 150 3way
*finish may vary
17526-172 MSRP $480

D **RAVI LAMP**
Silver Splatter Porcelain
Black Microfiber Shade/White Microfiber Lining
H: 30.5" x 20"/9" Rect
H: 77 x 51/23 Rect cm
Max Watts: 150 3way
*finish may vary
17526-239 MSRP $480

E

F

G

H

E **FELICITY LAMP**
Metallic Silver Pearl Porcelain
Ash Microfiber Shade
H: 27" x 18" Dia
H: 69 x 46 Dia cm
Max Watts: 150 3way
17095-232 MSRP $420

F **DALTON LAMP**
Amethyst Glass
Light Tan Silk Shade/Matching Lining
H: 27" x 14" Dia
H: 69 x 36 Dia cm
Max Watts: 150 3way
42089-496 MSRP $600

G **CAREY LAMP**
Metallic Silver Porcelain
Ash Microfiber Shade/Metallic Silver Sheer Lining
H: 31.5" x 13.5" Dia
H: 80 x 34 Dia cm
Max Watts: 150 3way
17240-311 MSRP $495

H **FABIO LAMP**
Metallic Silver Pearl Porcelain
Ash Microfiber Shade
H: 31" x 15" Dia
H: 79 x 38 Dia cm
Max Watts: 150 3way
17096-227 MSRP $390

A

B

A **JENSEN LAMP**
Polished Nickel
White Microfiber Shade/Matching Lining
H: 25" x 19" Dia
H: 63.5 x 48 Dia cm
Max Watts: 150 3way
46614-274 MSRP $750

B **GABBY LAMP**
Polished Nickel
White Microfiber Shade/Matching Lining
H: 26" x 18" Dia
H: 66 x 46 Dia cm
Max Watts: 150 3way
12094-290 MSRP $540

C **SAVANNAH LAMP**
Clear Glass/Dark Bronze
Wren Microfiber Shade/
Metallic Silver Sheer Lining
H: 40" x 21" Dia
H: 102 x 53 Dia cm
Max Watts: 60 On/Off
*pull chain/double socket
49878-189 MSRP $720

D **SAVANNAH LAMP**
Clear Glass/Dark Bronze
Ash Microfiber Shade/
White Microfiber Lining
H: 40" x 21" Dia
H: 102 x 53 Dia cm
Max Watts: 60 On/Off
*pull chain/double socket
49878-556 MSRP $720

C

D

E

F

E **FLYNN LAMP**
Mercury Black Reactive Glass
Black Paper Shade/Brushed Silver Paper Lining/Diffuser
H: 27.5" x 17" Dia
H: 70 x 43 Dia cm
Max Watts: 150 3way
*finish may vary
42780-523 MSRP $570

F **NAVARRO LAMP**
Polished Nickel/Black Marble
Black Paper Shade/Silver Foil Lining
H: 29.5" x 20"/9" Rect
H: 75 x 51/23 Rect cm
Max Watts: 150 3way
*marble may vary
46574-273 MSRP $660

G **NORMAN LAMP**
Clear Glass/Polished Nickel
Ash Microfiber Shade/
White Microfiber Lining
H: 32" x 17" Dia
H: 81 x 43 Dia cm
Max Watts: 150 3way
49028-616 MSRP $660

H **NAVARRO LAMP**
Polished Nickel/Black Marble
Ash Microfiber Shade/
White Microfiber Lining
H: 29.5" x 20"/9" Rect
H: 75 x 51/23 Rect cm
Max Watts: 150 3way
*marble may vary
46574-990 MSRP $660

G

H

A

B

A **BRAMPTON LAMP**
Gold Leafed Aluminum
White Paper Shade/Gold Foil Lining
H: 26.5" x 19" Dia
H: 67 x 48 Dia cm
Max Watts: 150 3way
*finish may vary
42430-384 MSRP $960

B **MALVA TALL LAMP**
Gunmetal/Gold Drip Porcelain
Ash Microfiber Shade/Matching Lining
H: 30.5" x 16" Dia
H: 77 x 41 Dia cm
Max Watts: 150 3way
*finish may vary
17709-301 MSRP $600

C **GUNDERSON LAMP**
Charcoal Porcelain
Ash Microfiber Shade/Matching Lining/Diffuser
H: 30.5" x 20" Dia
H: 77 x 51 Dia cm
Max Watts: 150 3way
11136-499 MSRP $630

D **WHEATON LAMP**
Gunmetal Porcelain
White Linen Shade
H: 30.5" x 15.5" Dia
H: 77 x 39 Dia cm
Max Watts: 150 3way
17541-668 MSRP $420

C

D

E

F

E **OVERTON LAMP**
Smoke/Caramel Art Glass
Taupe Sheer Shade/Silver Gray Sheer Lining
H: 27.5" x 18" Dia
H: 70 x 46 Dia cm
Max Watts: 150 3way
*finish may vary
17332-441 MSRP $465

F **SONA OVAL LAMP**
Zinc Clad
Metallic Silver Microfiber Shade/Silver Foil Lining
H: 30" x 17"/11" Oval
H: 76 x 43/28 Oval cm
Max Watts: 150 3way
*Clad my vary
49632-967 MSRP $555

G **LAWTON LAMP**
Dove Shagreen Embossed Leather
White Microfiber Shade/Matching Lining
H: 27.5" x 17" Dia
H: 70 x 43 Dia cm
Max Watts: 100 On/Off
*leather may vary
16453-315 MSRP $750

H **RAVEN LAMP**
Smoke Cased Glass/Clear Acrylic
White Microfiber Shade/Matching Lining
H: 28.5" x 20" Dia
H: 72 x 51 Dia cm
Max Watts: 150 3way
11179-569 MSRP $945

G

H

A

B

A **GRAHAM LAMP**
Natural Iron/Brass Welds/Black Marble
Black Microfiber Shade/Dark Silver
Sheer Lining
H: 28" x 17"/8" Rect
H: 71 x 43/20 Rect cm
Max Watts: 100 3way
*marble and finish may vary
42683-329 MSRP $630

B **GRAHAM LAMP**
Natural Iron/Brass Welds/Black Marble
Off-White Linen Shade/White Cotton Lining
H: 28" x 17"/8" Rect
H: 71 x 43/20 Rect cm
Max Watts: 100 3way
*marble and finish may vary
42683-974 MSRP $630

C **LENA LAMP**
Natural Iron/Brass Welds
Taupe Sheer Shade/Matching Lining
H: 33.5" x 15" Dia
H: 85 x 38 Dia cm
Max Watts: 150 3way
*finish may vary
46456-390 MSRP $720

D **WALKER LAMP**
Natural Iron/Brass Welds
Ash Microfiber Shade/Matching Lining
H: 35.5" x 15" Dia
H: 90 x 38 Dia cm
Max Watts: 150 3way
*finish may vary
46779-782 MSRP $765

C

D

E

F

E **WINNIPEG LAMP**
Natural Iron
Off-White Linen Shade/Diffuser
H: 29" x 20" Dia
H: 74 x 51 Dia cm
Max Watts: 150 3way
12535-457 MSRP $900

F **ALDER LAMP**
Distressed Silver Leafed Iron
Grey Green Microfiber Shade/Silver Foil Lining
H: 28.5" x 11" Dia
H: 72 x 28 Dia cm
Max Watts: 100 3way
*finish may vary
43136-109 MSRP $600

G **NARSI LAMP**
Distressed Aluminum
Ash Microfiber Shade/Matching Lining
H: 30.5" x 18" Dia
H: 77 x 46 Dia cm
Max Watts: 100 3way
42017-928 MSRP $600

H **DODGER LAMP**
Vintage Silver/Antique Brass
Ivory Microfiber Shade/Matching Lining/
Taupe Trim
H: 37.5" x 10"/8" Rect
H: 95 x 25/20 Rect cm
Max Watts: 100 Line Switch
42085-481 MSRP $480

G

H

A

B

C

D

A **MARIELLA LAMP**
Blue/Distressed Natural Porcelain
Ivory Microfiber Shade/Matching Lining
H: 25.5" x 17" Dia
H: 65 x 43 Dia cm
Max Watts: 150 3way
*finish may vary
11186-934 MSRP $720

B **PAULA LAMP**
Charcoal Crackle Porcelain
Natural Linen Shade
H: 27.5" x 18" Dia
H: 70 x 46 Dia cm
Max Watts: 150 3way
*finish may vary
17716-514 MSRP $450

C **NICO LAMP**
Ivory Glaze Porcelain/Charcoal Wash
Ivory Microfiber Shade
H: 29" x 20" Dia
H: 74 x 51 Dia cm
Max Watts: 150 3way
*finish may vary
17703-102 MSRP $480

D **AMELIA LAMP**
Matte Ivory/Slate Gray Porcelain
Ivory Microfiber Shade
H: 33.5" x 16" Dia
H: 85 x 41 Dia cm
Max Watts: 150 3way
*finish may vary
15422-356 MSRP $510

E **FERGIE LAMP**
Ash Gray Porcelain/Clear Acrylic
Light Silver Sheer Shade/Matching Lining
H: 29.5" x 14" Dia
H: 75 x 36 Dia cm
Max Watts: 150 3way
11182-132 MSRP $540

F **HUNTER LAMP**
Heather Marbled Porcelain/Clear Acrylic
Ash Microfiber Shade/Ivory Microfiber Lining
H: 42" x 18" Dia
H: 107 x 16 Dia cm
Max Watts: 150 3way
*finish may vary
11154-184 MSRP $750

G **HUNTER LAMP**
Gray Striped Porcelain/Clear Acrylic
Light Silver Sheer Shade/Matching Lining
H: 41" x 17.5" Dia
H: 104 x 44 Dia cm
Max Watts: 150 3way
*finish may vary
11137-471 MSRP $900

E

F

G

A

B

C

D

A **HERTZ LAMP**
Natural Cast Iron
Natural Linen Shade/Light Gray Cotton Lining
H: 29" x 18"/11" Oval
H: 74 x 46/28 Oval cm
Max Watts: 150 3way
43015-427 MSRP $840

B **ARNOT LAMP**
Natural Iron
Natual Linen Shade/Off-White Cotton Lining
H: 26" x 17" Dia
H: 66 x 43 Dia cm
Max Watts: 150 3way
*French wire
*taupe cloth cord
12002-210 MSRP $600

C **GARRISON CYLINDER LAMP**
Clear Glass/Vintage Brass
Mushroom Linen Shade/Sesame Cotton Lining
H: 27.5" x 16" Dia
H: 70 x 41 Dia cm
Max Watts: 150 3way
46633-163 MSRP $645

D **CLINT LAMP**
Antique Bronze
Light Beige Linen Shade/Matching Lining
H: 29" x 20" Dia
H: 74 x 51 Dia cm
Max Watts: 150 3way
44010-996 MSRP $810

E

F

G

H

14006-580
*alternate shade

I

I **NAOMI LAMP**
Antique Bronze Aluminum
Off-White Linen Shade/
Matching Lining
Max Watts:150 3way
H: 30.5" x 21" Dia
H: 77 x 53 Dia cm
44150-968 MSRP $750

E **PATRICE LAMP**
Natural Cast Iron
Natural Linen Shade/
Light Gray Cotton Lining
H: 22" x 18"/12.5" Oval
H: 56 x 46/32 Oval cm
Max Watts: 100 3way
43160-360 MSRP $900

F **POTTER LAMP**
Natural Iron
Off-White Linen Shade
H: 25" x 18"/12.5" Oval
H: 64 x 46/32 Oval cm
Max Watts: 150 3way
12012-398 MSRP $600

G **EMERSON LAMP**
Clear Glass/Natural Wood/Rope
Off-White Linen Shade/Matching Lining
H: 29.5" x 18"/12" Oval
H: 75 x 46/30 Oval cm
Max Watts: 150 3way
*finish may vary
14006-214 MSRP $690

H **EMERSON LAMP**
Clear Glass/Natural Wood/Rope
Natural Linen Shade/Matching Cotton Lining/
Whip Stitch Detail
H: 29.5" x 18"/12" Oval
H: 75 x 46/30 Oval cm
Max Watts: 150 3way
*finish may vary
14006-580 MSRP $690

A

B

C

D

A **BAXTER LAMP**
Clear Glass
Cloud Gray Microfiber Shade/
Matching Lining
H: 21.5" x 15" Dia
H: 55 x 38 Dia cm
Max Watts: 150 3way
17523-209 MSRP $450

B **JAMAL LAMP**
Smoke Ombre Glass
Ash Microfiber Shade
H: 24.5" x 17" Dia
H: 62 x 43 Dia cm
Max Watts: 150 3way
*finish may vary
*French wire
17438-348 MSRP $390

C **ADRIAN LAMP**
Clear Glass/Clear Acrylic
Glitter Nylon-Cotton Blend Shade/
Silver Foil Lining
H: 26.5" x 15" Dia
H: 67 x 38 Dia cm
Max Watts: 100 3way
49629-868 MSRP $840

D **CLEO LAMP**
White Cased Glass/Clear Glass/Clear Acrylic
Ash Microfiber Shade
H: 25.5" x 17" Dia
H: 65 x 43 Dia cm
Max Watts: 150 3way
17525-215 MSRP $570

E

F

G

H

E **EZRA LAMP**
Frosted Glass
Ash Microfiber Shade/
White Microfiber Lining
H : 25" x 17" Dia
H: 64 x 43 Dia cm
Max Watts: 150 3way
*finish may vary
44017-581 MSRP $510

F **FOSTER LAMP**
Smoke Glass
Ash Microfiber Shade/
White Microfiber Lining
H: 26" x 17" Dia
H: 66 x 43 Dia cm
Max Watts: 150 3way
*finish may vary
17549-258 MSRP $480

G **LEIGH LAMP**
White Linen Etched Glass
White Silk Shade/Silver Foil Lining
H: 28" x 16" Dia
H: 71 x 41 Dia cm
Max Watts: 150 3way
12979-688 MSRP $570

H **ELYSSA LAMP**
Smoke Glass
Ash Microfiber Shade
H: 30" x 14" Dia
H: 76 x 36 Dia cm
Max Watts: 150 3way
*finish may vary
17552-331 MSRP $360

A

B

C

A **TABITHA LAMP**
Cyan Art Glass
White Microfiber
H: 26.5" x 17" Dia
H: 67 x 43 Dia cm
Max Watts: 100 On/Off
17734-527 MSRP $420

B **RORY LAMP**
Soft Cyan Glass
White Microfiber Shade
H: 25.5" x 16" Dia
H: 65 x 41 Dia cm
Max Watts:150 3way
17336-453 MSRP $300

C **ELYSSA LAMP**
Recycled Glass
White Microfiber Shade
H: 30" x 12" Sq
H: 76 x 30 Sq cm
Max Watts: 150 3way
*finish may vary
17551-265 MSRP $360

D **NEVADA LAMP**
Aqua Ceramic
Ivory Microfiber Shade
H: 28.5" x 17" Dia
H: 72 x 43 Dia cm
Max Watts: 150 3way
17699-983 MSRP $390

E **EDIE LAMP**
Teal Reactive Glaze Porcelain
White Microfiber Shade/Matching Lining
H: 31" x 18"/12" Oval
H: 79 x 46/30 Oval cm
Max Watts: 150 3way
*finish may vary
15425-231 MSRP $420

F **EDGE LAMP**
Clear/Navy Glass
White Microfiber Shade/Matching Lining
H: 33.5" x 15" Dia
H: 85 x 38 Dia cm
Max Watts: 150 3way
17092-323 MSRP $570

G WINDSOR SMITH COLLECTION
CHASCA LAMP
White Gesso/Stained Glass/
Antiqued Mirror/Plain Mirror
White Microfiber Shade/Matching Lining
H: 30.5" x 20"/13" Rect
H: 77 x 51/33 Rect cm
Max Watts: 150 3way
*finish may vary
DS44005-133 MSRP $1,185

D

E

F

G

A

B

C

D

A **ELBURN LAMP**
Crackle Ceramic
Ivory Microfiber Shade
H: 28.5" x 18"/11" Rect
H: 72 x 46/28 Rect cm
Max Watts: 150 3way
*finish may vary
17547-251 MSRP $390

B **WHEATON LAMP**
White Crackle Porcelain
Ivory Microfiber Shade
H: 28.5" x 17" Dia
H: 74 x 43 Dia cm
Max Watts: 150 3way
*finish may vary
17540-667 MSRP $420

C **FREIDA LAMP**
Color Splash Porcelain/Ivory Porcelain
Ivory Microfiber Shade/
Navy Blue Sheer Lining
H: 35" x 17" Dia
H: 89 x 43 Dia cm
Max Watts: 150 3way
*finish may vary
11156-194 MSRP $690

D **PARKSTON LAMP**
Antiqued Ivory Crackle Porcelain
Ivory Microfiber Shade
H: 30.5" x 18" Dia
H: 77 x 46 Dia cm
Max Watts: 150 3way
*finish may vary
17706-525 MSRP $420

E

F

G

H

E **VAGABOND LAMP**
Ivory Crackle Porcelain
Ivory Microfiber Shade
H: 26" x 17" Dia
H: 66 x 43 Dia cm
Max Watts: 150 3way
*finish may vary
17021-710 MSRP $300

F **REGINA LAMP**
Blue/Ivory Crackle Porcelain
Ivory Microfiber Shade
H: 27.5" x 18" Dia
H: 70 x 46 Dia cm
Max Watts: 150 3way
*finish may vary
17725-354 MSRP $540

G **FEYE LAMP**
Ivory Stained Crackle Porcelain
Putty Microfiber Shade/Light Gray Cotton Lining
H: 28" x 14" Dia
H: 71 x 36 Dia cm
Max Watts: 150 3way
*finish may vary
17255-503 MSRP $630

H **GORDON LAMP**
Ivory Crackle Porcelain
Putty Microfiber Shade
H: 28" x 16" Dia
H: 71 x 41 Dia cm
Max Watts: 150 3way
17932-794 MSRP $510

A

B

A WINDSOR SMITH COLLECTION
IMANA LAMP
White Satin Porcelain
Beige Textured Linen/Taupe Cotton Lining
H: 29.5" x 19"/13" Rect
H: 75 x 48/33 Rect cm
Max Watts: 150 3way
DS17004-186 MSRP $825

B **ROBERTSON LAMP**
Ivory Crackle Porcelain
Ivory Microfiber Shade/Matching Lining
H: 31.5" x 16" Dia
H: 80 x 41 Dia cm
Max Watts: 150 3way
*finish may vary
17712-838 MSRP $750

C **CALHOUN LAMP**
Cream Crackle Porcelain/Light Walnut Wood
Putty Microfiber Shade/Matching Lining
H: 36" x 15" Dia
H: 91 x 38 Dia cm
Max Watts: 150 3way
*finish may vary
42447-796 MSRP $900

C

D

E

D **JAMIENNE LAMP**
Ivory Crackled Porcelain/Clear Acrylic
Ivory Microfiber Shade/Matching Lining
H: 23" x 14" Dia
H: 58 x 36 Dia cm
Max Watts: 150 3way
*finish may vary
17059-588 MSRP $600

E **CAINAN LAMP**
Desert Ivory Ceramic
Ivory Microfiber Shade
H: 26" x 18" Dia
H: 67 x 46 Dia cm
Max Watts: 150 3way
*finish may vary
11190-525 MSRP $900

A

B

C

D

A **SWEENEY LAMP**
Gold Porcelain
Ivory Microfiber Shade
H: 27" x 18"/11" Oval
H: 69 x 46/28 Oval cm
Max Watts: 150 3way
*finish may vary
17768-633 MSRP $450

B **RAVI LAMP**
Scratched Gilt Porcelain
Taupe Sheer Shade/Dark Silver Sheer Lining
H: 30.5" x 20"/9" Rect
H: 77 x 51/23 Rect cm
Max Watts:100 3way
*finish may vary
17419-553 MSRP $480

C **DOROTHY LAMP**
Matte/Gloss Gold Porcelain
Black Microfiber Shade/Mustard Gold
Microfiber Lining
H: 32" x 19" Dia
H: 81 x 48 Dia cm
Max Watts: 150 3way
17548-257 MSRP $720

D **DOROTHY LAMP**
Matte/Gloss Gold Porcelain
Ivory Microfiber Shade/Taupe Sheer
Microfiber Lining
H: 32" x 19" Dia
H: 81 x 48 Dia cm
Max Watts: 150 3way
17548-522 MSRP $720

E

F

G

H

E **EMMALINE LAMP**
Ivory Crackle/Gold Porcelain
Ivory Microfiber Shade/White Microfiber Lining
H: 24.5" x 11" Dia
H: 62 x 28 Dia cm
Max Watts: 150 3way
*finish may vary
11157-207 MSRP $480

F **POMONA LAMP**
Ivory Crackle/Gold Porcelain
Ivory Microfiber Shade
H: 21.5" x 20"/9" Rect
H: 55 x 51/23 Rect cm
Max Watts: 150 3way
*finish may vary
17729-317 MSRP $390

G LAURA KIRAR COLLECTION
TASSEL LAMP
Ivory Tassel
Ivory Microfiber Shade/Matching Lining/Diffuser
H: 29" x 18" Dia
H: 74 x 46 Dia cm
Max Watts: 100 3way
DK49938-757 MSRP $795

H **ADAIR LAMP**
White/Gold Porcelain
White Microfiber Shade/
Gold Foil Lining
H: 31" x 18" Dia
H: 79 x 46 Dia cm
Max Watts: 150 3way
17528-443 MSRP $600

A

B

C

D

A **EILEEN LAMP**
Ombre Shadow Reactive Porcelain
Wren Microfiber Shade
H: 23" x 13" Dia
H: 58 x 33 Dia cm
Max Watts: 150 3way
*finish may vary
11152-176 MSRP $300

B **EILEEN LAMP**
Ombre Shadow Reactive Porcelain
White Microfiber Shade
H: 23" x 13" Dia
H: 58 x 33 Dia cm
Max Watts: 150 3way
*finish may vary
11152-926 MSRP $300

C **DYER LAMP**
Black Etched Glass
Black Microfiber Shade/Slate Sheer Lining
H: 25" x 16" Dia
H: 64 x 41 Dia cm
Max Watts: 150 3way
*finish may vary
17556-909 MSRP $450

D **DYER LAMP**
Black Etched Glass
Ivory Microfiber Shade/Matching Lining
H: 25" x 16" Dia
H: 64 x 41 Dia cm
Max Watts: 150 3way
*finish may vary
17556-343 MSRP $450

E **EVA LAMP**
Matte Charcoal/Irridescent Glass
Light Tan Silk Shade/Matching Lining
H: 16.5" x 12" Dia
H: 42 x 30 Dia cm
Max Watts: 150 3way
*finish may vary
17560-299 MSRP $360

F **FREY LAMP**
Matte Charcoal/Bronze Porcelain
Ivory Microfiber Shade
H: 24" x 16" Dia
H: 61 x 41 Dia cm
Max Watts: 150 3way
*finish may vary
15424-351 MSRP $300

E

F

A

A WINDSOR SMITH COLLECTION
JANUS LAMP
Gray Laquered Resin/Antique Brass
Off-White Linen Shade/Matching Lining
H: 29" x 25.5"/12" Rect
H: 74 x 65/30 Rect cm
Max Watts: 100 Line Switch
DS49020-205 MSRP $1,305

B WINDSOR SMITH COLLECTION
IXCHEL LAMP
Blue and White Porcelain/Clear Acrylic
Ivory Microfiber Shade/Matching Lining
H: 32.5" x 18" Dia
H: 83 x 46 Dia cm
Max Watts: 150 3way
*finish may vary
DS17002-167 MSRP $780

C **GUNDERSON LAMP**
Sky Blue Reactive Glaze Porcelain
White Microfiber Shade/
Dark Silver Microfiber Lining
H: 33.5" x 19" Dia
H: 85 x 48 Dia cm
Max Watts: 150 3way
*finish may vary
11153-181MSRP $600

D **DARWIN LAMP**
Seaside Reactive Glaze Porcelain
Ivory Microfiber Shade/Matching Lining
H: 24" x 19"/12" Oval
H: 61 x 48/30 Oval cm
Max Watts: 150 3way
*finish may vary
15426-245 MSRP $390

E **DESTINEE TORCHIERE**
Smoke Blue Glass/Natural Limestone
H: 15" x 10.5" Dia
H: 38 x 27 Dia cm
Max Watts: 60 Line Switch
*shown with medium antique tubular bulb
*black cloth cord
41155 MSRP $900

F WINDSOR SMITH COLLECTION
RHEA LAMP
Blue and Gold Plated Porcelain
Ivory Microfiber Shade/Honey Sheer Lining
H: 30" x 15" Sq
H: 76 x 38 Sq cm
Max Watts: 150 3way
DS17003-174 MSRP $675

G WINDSOR SMITH COLLECTION
VERITAS LAMP
Celadon Porcelain
White Microfiber Shade/
Celadon Sheer Lining
H: 32" x 21" Dia
H: 81 x 53 Dia cm
Max Watts: 150 3way
DS17007-165 MSRP $750

B

C

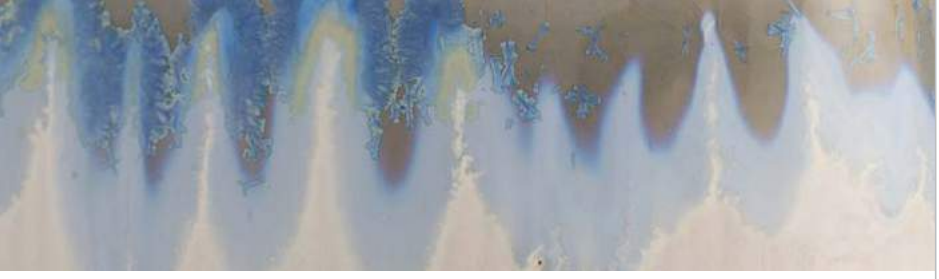

D

E

F

G

A

B

ALTERNATE VIEW

C

D

A **ELLIOT LARGE LAMP**
Polished Brass/Natural Iron/Brass Welds
H: 14.5" x W: 12" x D: 4.5"
H: 37 x D: 30 x W: 11 cm
Max Watts: 25 Line Switch
*shown with silver bowl globe bulb
*finish may vary
42077 MSRP $600

B **ELLIOT SMALL LAMP**
Polished Brass/Natural Iron/Brass Welds
H: 11" x W: 10" x D: 4.5"
H: 28 x D: 25 x W: 11 cm
Max Watts: 25 Line Switch
*shown with silver bowl globe bulb
*finish may vary
42076 MSRP $450

C **DELILAH LAMP**
Matte Brass/Polished Brass
Ivory Microfiber Shade/No Lining
H: 21" x 8" Dia
H: 79 x 20 Dia cm
Max Watts: 60 Line Switch
42087-492 MSRP $360

D **DANFORD TORCHIERE**
Smoke Luster Glass/Antique Brass
H: 16.5" x W: 7.5" x D: 3.5"
H: 42 x W: 19 x D: 9 cm
Max Watts: 25 Line Switch
*shown with small clear tubular bulb
42088 MSRP $720

E

E **ALBERT DESK LAMP**
English Bronze/Metal Shade/Diffuser
H: 19.5" x 15" Dia
H: 50 x 38 Dia cm
Max Watts (per socket): 40 On/Off
*pull chain/double socket
42470 MSRP $540

F

F **VIOLETTA LAMP**
Black Iron/Antique Brass/Acrylic Frosted Diffuser
H: 23" x 15" Dia
H: 58 x 38 Dia cm
Max Watts (per socket): 40 On/Off
*pull chain/double socket/3 position switch
49675 MSRP $990

A

A **SABINE LAMP**
Antique Brass/Clear Glass
H: 26" x 11.5" Tri
H: 67 x 29 Tri cm
Max Watts: 25 Line Switch
49889 MSRP $600

B **YASMIN LAMP**
Antique Brass/White Marble
Off-White Linen Shade/Matching Lining
H: 28" x W: 10" x Adj. D: 17" - 19"
H: 71 x W: 25 x Adj. D: 43 - 48 cm
Max Watts (per socket): 60 Line Switch
*swivel shade
*double socket
49023 MSRP $840

C **YASMIN LAMP**
Antique Black/Antique Brass
Off-White Linen Shade/Matching Lining
H: 28" x W: 10" x Adj. D: 17" - 19"
H: 71 x W: 25 x Adj. D: 43 - 48 cm
Max Watts (per socket): 60 Line Switch
*swivel shade
*double socket
49680 MSRP $840

B

C

D **SABINE LAMP**
Polished Nickel/Clear Glass
H: 26" x 11.5" Tri
H: 67 x 29 Tri cm
Max Watts: 25 Line Switch
49935 MSRP $600

E **JUNIPER LAMP**
Vintage Silver/Black Marble
H: 28.5" x D: 10" x Adj D: 13" - 15.5"
H: 72 x D: 25 x Adj D: 33 - 39 cm
Max Watts(per socket): 60 Line Switch
*marble may vary
*double socket
49030 MSRP $1,050

F **JACQUELINE LAMP**
Polished Nickel/Crystal
Gunmetal Pattern Shade/Pewter Lining/Diffuser
Adj. H: 22" - 29.5" x 25"/18" Oval
Adj. H: 56 - 75 x W: 63 x D: 46 cm
Max Watts (per socket): 60 Dimmer
*double socket
49933-546 MSRP $780

D

E

F

A

B

C

D

A **DOMINICK TORCHIERE**
Opal Glass/Antique Brass
H: 18″ x 7″ Dia
H: 46 x 18 Dia cm
Max Watts: 60 On/Off Toggle
49029 MSRP $600

B **DUHON LAMP**
Opal Glass/Antique Brass
H: 20″ x 9.5″ Dia
H: 51 x 24 Dia cm
Max Watts: 60 Line Switch
49033 MSRP $510

C WINDSOR SMITH COLLECTION
AURA LAMP
Antique Brass/Opal Acrylic
H: 10″ x W: 15″ x D: 2″
H: 25 x W: 38 x D: 5 cm
Max Watts: 4.2 (LED only)
*black cloth cord
DS49024 MSRP $840

D WINDSOR SMITH COLLECTION
LUNA LAMP
Antique Brass/Opal Acrylic
H: 19″ x W: 17.5″ x D: 3″
H: 48 x W: 44 x D: 8 cm
Max Watts: 4.2 (LED only)
*black cloth cord
DS49023 MSRP $885

A **EVIE LAMP**
Honed White Onyx
H: 14" x W: 8 x D: 3.5"
H: 36 x W: 20 x D: 9 cm
Max Watts: 40 Line Switch
*taupe cloth cord
*onyx may vary
49942 MSRP $1,200

B **FLEETWOOD LAMP**
Vintage Brass/White Marble
Adj H: 5.5" - 12.5" x W: 9.5" x Adj D: 6.5" - 16"
Adj H: 14 - 32 x W: 24 x Adj D: 17 - 41 cm
Max Watts: 60 Line Switch
*marble may vary
*shown with radio bulb
*taupe cloth cord
49700 MSRP $690

C **DEXTER DESK LAMP**
Antique Brass/Clear Crystal
H: 12" x W: 17" x D: 4.5"
H: 30 x W: 43 x D: 11 cm
Max Watts: 60 On/Off
*pull chain
49940 MSRP $750

D **DAVENPORT LAMP**
Clear Crystal/Antique Brass
Natural Linen Shade
H: 17.5" x Adj W: 8" - 22" x Adj D: 8" - 22"
H: 44 x Adj W: 20 - 56 cm x Adj D: 20 - 56 cm
Max Watts: 60 Line Switch
*taupe cloth cord
49941-921 MSRP $840

E **JANA DESK LAMP**
White Marble/Vintage Brass
H: 26" x W: 18" x D: 7.5"
H: 66 x W: 46 x D: 19 cm
Max Watts: 25 Line Switch
*marble may vary
49024 MSRP $1,200

F **ELMER DESK LAMP**
Antique Brass/Frosted Glass
Adj H: 23 - 25" x Adj W: 6" - 17.5" x D: 6.5"
Adj H: 58 - 64 x Adj W: 15 - 44 x D: 17 cm
Max Watts: 40 Line Switch
49037 MSRP $720

C

D

E

F

A

A WINDSOR SMITH COLLECTION
AJA EASEL FLOOR LAMP
Antique Brass
Adj H: 82" - 115" x 40" Dia
Adj H: 208 - 292 x 102 Dia cm
Max Watts: 35 On/Off Foot Switch
DS79001 MSRP $2,700

B

B **ROOSEVELT FLOOR LAMP**
Antique Brass/Clear Crystal
Ivory Microfiber Shade/Matching Lining
H: 65.5" x 21" Dia
H: 166 x 53 Dia cm
Max Watts: 150 3way
79986-386 MSRP $1,650

C

C **FINLEY FLOOR LAMP**
Polished Brass
Ivory Microfiber Shade/
White Microfiber Lining
H: 64" x 20"/13" Rect
H: 163 x 51/33 Rect cm
Max Watts: 100 3way
72005-977 MSRP $2,100

D

D WINDSOR SMITH COLLECTION
AJA EASEL FLOOR LAMP
Vintage Silver
Adj H: 82" - 115" x 40" Dia
Adj H: 208 - 292 x 102 Dia cm
Max Watts: 35 On/Off Foot Switch
DS79002 MSRP $2,700

A **YASMIN FLOOR LAMP**
Antique Black/Antique Brass
White Linen Shade/Matching Lining
H: 69" x W: 9.5" x D: 22.5"
H: 175 x W: 24 x D: 57 cm
Max Watts (per socket): 60 Foot Dimmer
*double socket
79680 MSRP $1,470

B **JUNIPER FLOOR LAMP**
Antique Brass/White Marble
Off-White Linen Shade/Matching Lining
Adj. H: 69" - 72" x Adj. W: 32" - 35" x D: 15"
Adj. H: 175 - 183 x Adj. W: 81 - 89 x D: 38 cm
Max Watts: 60 Foot Dimmer
*double socket
*marble may vary
79007 MSRP $2,700

C **JUNIPER FLOOR LAMP**
Vintage Silver/Black Marble
Off-White Linen Shade/Matching Lining
Adj. H: 69" - 72" x Adj. W: 32" - 35" x D: 15"
Adj. H: 175 - 183 x Adj. W: 81 - 89 x D: 38 cm
Max Watts: 60 Foot Dimmer
*double socket
*marble may vary
79000 MSRP $2,700

D **WATSON FLOOR LAMP**
Antique Brass/Bronze/White Marble
Adj. H: 60" - 68.5" x Adj.W: 21.5" - 25.5" x D: 9"
Adj. H: 152 - 174 x Adj W: 55 - 65 x D: 23 cm
Max Watts: 60 On/Off
*marble may vary
*black cloth cord
79006 MSRP $1,350

A

A **DUNN FLOOR LAMP**
Bronze/Antique Brass
Off-White Linen Shade/Matching Lining
H: 86" x 26" Dia
H: 218 x 66 Dia cm
Max Watts: 60 Foot Dimmer
79048-905 MSRP $1,500

B

C

B **DASH FLOOR LAMP**
Antique Brass/Dark Natural Iron
Ivory Microfiber Shade/
Matching Lining
H: 69" x 16" Dia
H: 175 x 41 Dia cm
Max Watts: 150 3way
*finish may vary
*taupe cloth cord
*French wire
72004-946 MSRP $1,950

C **DASH FLOOR LAMP**
Antique Brass/Dark Natural Iron
Black Microfiber Shade/
White Microfiber Lining
H: 69" x 16" Dia
H: 175 x 41 Dia cm
Max Watts: 150 3way
*finish may vary
*taupe cloth cord
*French wire
72004-947 MSRP $1,950

D **HADLEY FLOOR LAMP**
Matte Black Steel/Antique Brass
Black Microfiber Shade/Mustard Gold Sheer Lining/Diffuser
H: 65.5" x 22" Dia
H: 166 x 56 Dia cm
Max Watts: 150 3way
79932-555 MSRP $1,320

E **HADLEY FLOOR LAMP**
Matte Black Steel/Antique Brass
Ivory Microfiber Shade/White Microfiber Lining
H: 65.5" x 22" Dia
H: 166 x 56 Dia cm
Max Watts: 150 3way
79932-769 MSRP $1,320

F **VIOLETTA FLOOR LAMP**
Matte Black Steel/Antique Brass
Black Iron Shade
H: 58.5" x 20" Dia
H: 149 x 51 Dia cm
Max Watts (per socket): 60 3 Position Switch
*pull chain/double socket
79862-661 MSRP $1,650

A

A **DELFINO FLOOR TORCHIERE**
Bronze/White Marble/Opal Glass
H: 70.5" x 12" Dia
H: 179 x 30 Dia cm
Max Watts(per socket): 60 Foot Dimmer
*marble may vary
79047 MSRP $1,650

B

B **STEFAN FLOOR TORCHIERE**
Black Marble/Black Iron/Vintage Silver/
Frosted Glass Shades
H: 70" x 13.5" Tri
H: 178 x 34 Tri cm
Max Watts (per socket): 60 Foot Switch
*marble may vary
79001 MSRP $1,650

C

C **STEFAN FLOOR TORCHIERE**
White Marble/Black Iron/Antique Brass/
Frosted Glass Shades
H: 70" x 13.5" Tri
H: 178 x 34 Tri cm
Max Watts (per socket): 60 Foot Switch
*marble may vary
79661 MSRP $1,650

D

D **MILLIE FLOOR LAMP**
Polished Brass/Black Marble/Seedy Glass
H: 72.5" x 17" Dia
H: 184 x 43 Dia cm
Max Watts (per socket): 40 Full Range Dimmer
*marble may vary
*shown with radio bulbs
79998 MSRP $1,800

A

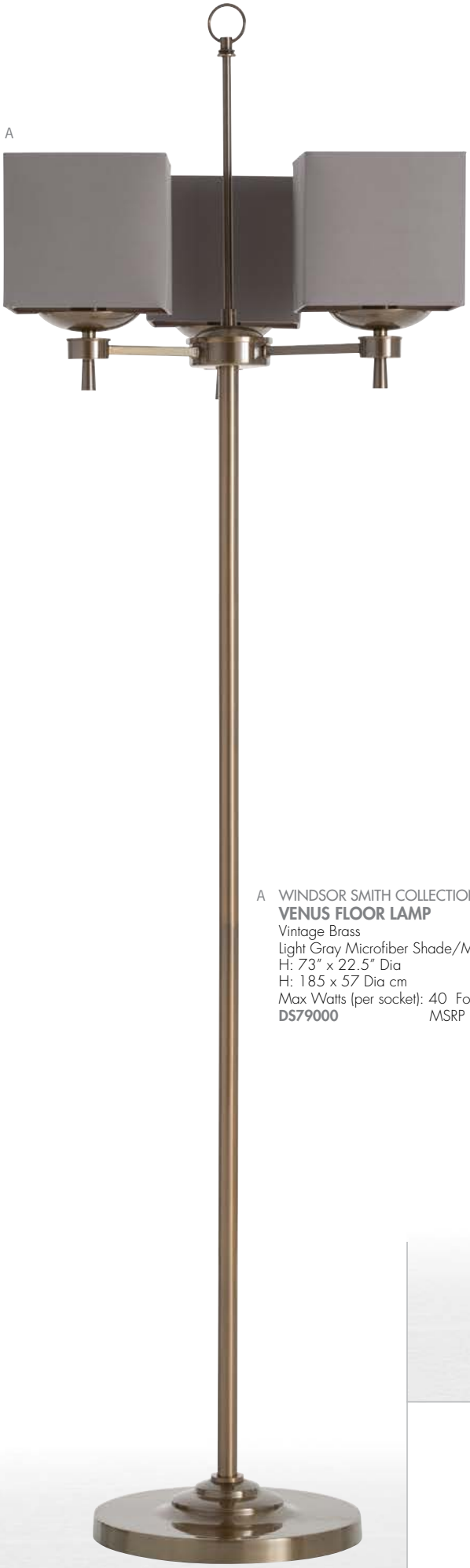

B

C

A WINDSOR SMITH COLLECTION
VENUS FLOOR LAMP
Vintage Brass
Light Gray Microfiber Shade/Matching Lining
H: 73" x 22.5" Dia
H: 185 x 57 Dia cm
Max Watts (per socket): 40 Foot Dimmer
DS79000 MSRP $1,560

B **ELLIS FLOOR LAMP**
Antique Brass
Beige Textured Linen Shade/Taupe Cotton Lining
H: 64" x 15.5" Tri
H: 163 x 39 Tri cm
Max Watts: 100 3way
72001-941 MSRP $900

C **FRISCO FLOOR TORCHIERE**
Vintage Brass
H: 59.5" x 10" Dia
H: 151 x 25 Dia cm
Max Watts: 100 Foot Switch
*finish may vary
72002 MSRP $900

D

E

E **PEARSON FLOOR LAMP**
Antique Brass/White Marble
Ivory Microfiber Shade
H: 70.5″ x 22″ Dia
H: 179 x 56 Dia cm
Max Watts: 100 Foot Switch
*marble may vary
79999-196 MSRP $2,520

D **WILSON FLOOR LAMP**
Antique Brass/White Marble
Off-White Linen/Matching Lining
H: 63″ x 22″ Dia
H: 160 x 56 Dia cm
Max Watts (per socket): 60 On/Off
*marble may vary
*pull chain/double socket
79017-988 MSRP $1,200

A

B

A **PARRISH FLOOR LAMP**
Antique Bronze/Clear Glass
H: 67" x W: 12.5" x D: 10"
H: 170 x W: 32 x D: 25 cm
Max Watts: 60 Foot Switch
79953 MSRP $1,020

B **JILLIAN FLOOR LAMP**
Vintage Silver/Black Marble/
Painted White Interior
H: 78.5" x W: 23.5" x D: 12"
H: 199 x W: 60 x D: 30 cm
Max Watts: 60 Foot Switch
*black cloth cord
*adjustable shade height
*marble may vary
79991 MSRP $1,650

C

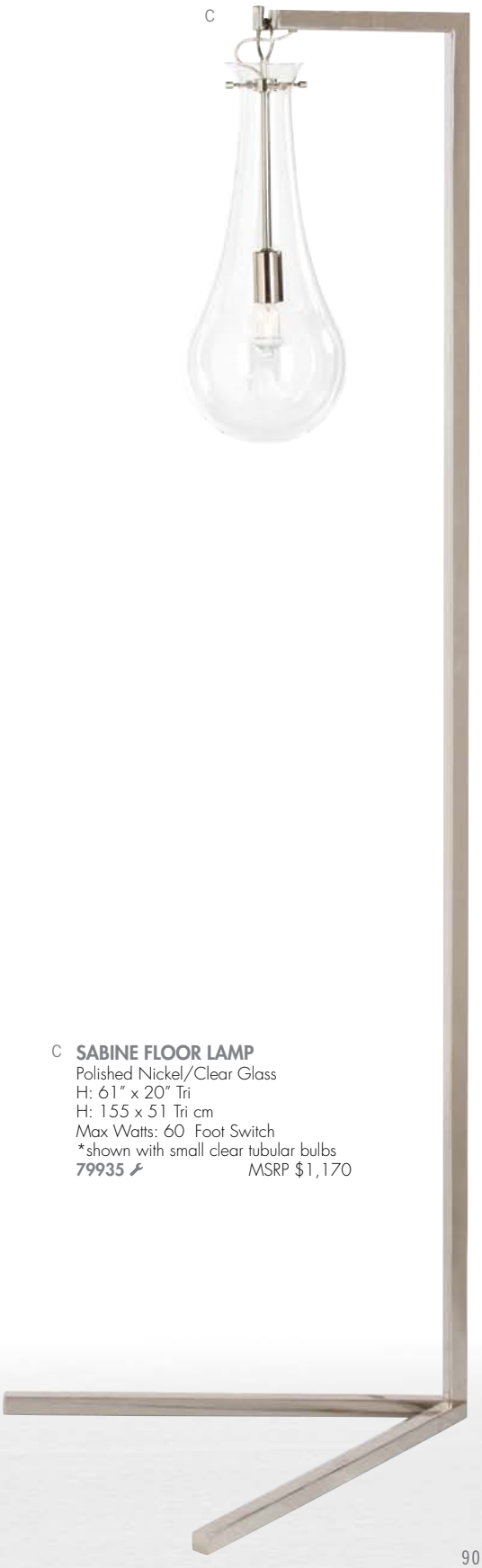

C **SABINE FLOOR LAMP**
Polished Nickel/Clear Glass
H: 61″ x 20″ Tri
H: 155 x 51 Tri cm
Max Watts: 60 Foot Switch
*shown with small clear tubular bulbs
79935 MSRP $1,170

D

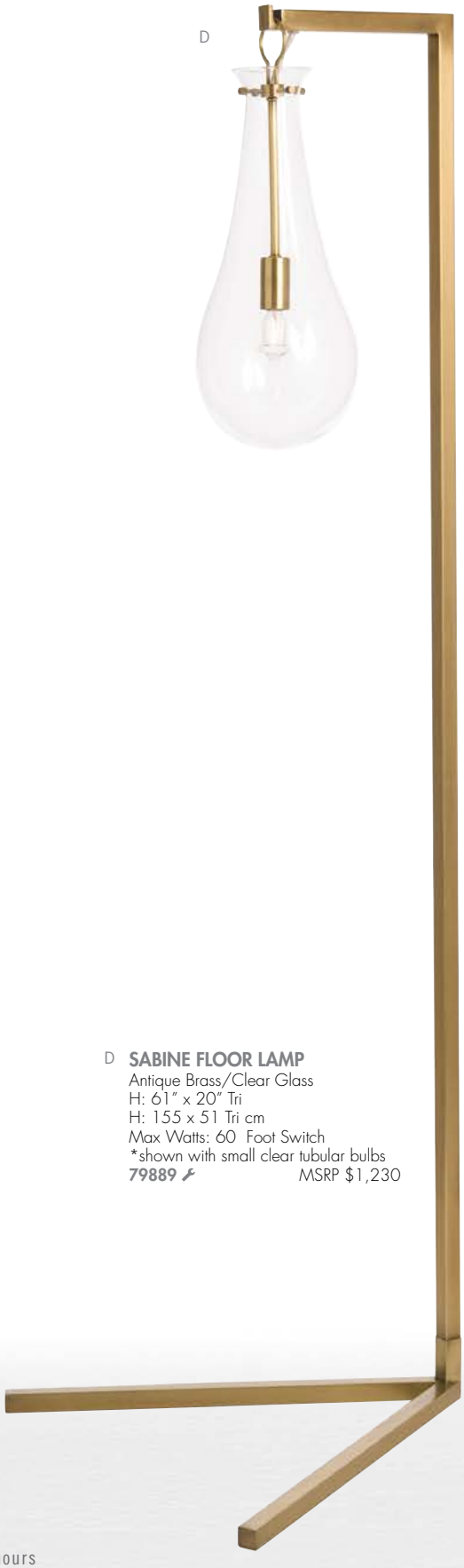

D **SABINE FLOOR LAMP**
Antique Brass/Clear Glass
H: 61″ x 20″ Tri
H: 155 x 51 Tri cm
Max Watts: 60 Foot Switch
*shown with small clear tubular bulbs
79889 MSRP $1,230

A

B

A **ELDEN FLOOR LAMP**
Gray Resin/Polished Nickel
White Microfiber Shade/Matching Lining
H: 68.5" x 26" Dia
H: 174 x 66 Dia cm
Max Watts: 150 Foot Dimmer
79988-101 MSRP $1,590

B **ERRIST FLOOR LAMP**
Polished Nickel/Bronze
Ash Microfiber Shade/White Microfiber Lining
H: 68" x 21" Dia
H: 173 x 53 Dia cm
Max Watts: 150 3way
72007-957 MSRP $2,100

C

D

C **DAYTON FLOOR LAMP**
Polished Nickel/Bronze
Ash Microfiber Shade/White Microfiber Lining
H: 64" x 20" Dia
H: 163 x 51 Dia cm
Max Watts: 150 3way
72003-944 MSRP $1,350

D **BELDEN FLOOR LAMP**
Polished Nickel
Off-White Linen Shade/Matching Lining
H: 64" x 23" Dia
H: 163 x 58 Dia cm
Max Watts: 100 Foot Dimmer
79914-869 MSRP $1,290

A

B

C

A **WALDO FLOOR LAMP**
Antique Brass
Antique Bronze Silk Shade/Matching Lining
H: 68.5" x 24" Dia
H: 174 x 61 Dia cm
Max Watts: 150 Foot Dimmer
79825-344 MSRP $1,575

B **NORMAN FLOOR LAMP**
Antique Brass/Clear Glass
White Parchment Shade/Matching Lining
H: 69" x 23" Dia
H: 175 x 58 Dia cm
Max Watts: 100 3way
79957-157 MSRP $1,230

C **NORMAN FLOOR LAMP**
Polished Nickel/Clear Glass
White Paper Shade/Matching Lining
H: 69" x 23" Dia
H: 175 x 58 Dia cm
Max Watts: 100 3way
79956-148 MSRP $1,230

D

E

D **ANAHEIM FLOOR LAMP**
Clear Glass
White Linen Shade/Matching Lining
H: 63" x 20" Dia
H: 160 x 51 Dia cm
Max Watts: 150 Full Range Dimmer
*French wire
72067-966 MSRP $1,290

E **NARSI FLOOR LAMP**
Distressed Aluminum
Natural Linen Shade/Light Gray Cotton Lining
H: 65" x 21.5" Dia
H: 165 x 55 Dia cm
Max Watts: 150 3way
72017-542 MSRP $1,800

A

A BARRY DIXON COLLECTION
AUGER FLOOR LAMP
Vintage Silver Clad/Natural Iron
Light Beige Linen Shade/Matching Lining
H: 75" x 23" Dia
H: 191 x 58 Dia cm
Max Watts: 150 3way
*clad may vary
DD72050-857 MSRP $3,300

B **GRAHAM FLOOR LAMP**
Natural Iron/Brass Welds/Blackened Iron
Black Microfiber Shade/Dark Silver Sheer Lining
H: 61" x 19"/13" Rect
H: 155 x 48/33 Rect cm
Max Watts: 150 3way
*finish may vary
72009-971 MSRP $1,410

C **GRAHAM FLOOR LAMP**
Natural Iron/Brass Welds/Blackened Iron
Off-White Linen/Matching Lining
H: 61" x 19"/13" Rect
H: 155 x 48/33 Rect cm
Max Watts: 150 3way
*finish may vary
72009-953 MSRP $1,410

D **FRANCO FLOOR LAMP**
Vintage Silver/Polished Brass
Putty Microfiber Shade/White Microfiber Lining
H: 61" x 17" Dia
H: 155 x 43 Dia cm
Max Watts (per socket): 60 On/Off
*pull chain/double socket
*finish may vary
72008-965 MSRP $1,440

E **DODGER FLOOR LAMP**
Vintage Silver/Antique Brass/Blaackened Iron
Ivory Microfiber Shade/Matching Lining
H: 59.5" x 20"/13" Rect
H: 151 x 51/33 Rect cm
Max Watts (per socket): 60 On/Off
*pull chain/double socket
72006-948 MSRP $1,140

B

C

D

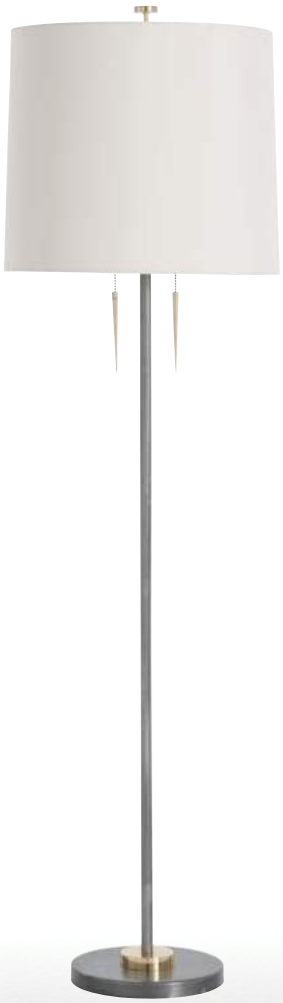

E

A

A **HUXLEY FLOOR LAMP**
Washed Gray Wood/Antique Silver Iron Clad
Natural Linen Shade/Light Gray Cotton Lining
H: 70" x 22" Dia
H: 178 x 56 Dia cm
Max Watts: 150 3way
*finish may vary
72092-501 MSRP $1,950

B

B **DENZEL FLOOR LAMP**
Natural Waxed Wood/Natural Iron
Light Beige Linen Shade/Matching Lining
H: 72.5" x 21.5" Dia
H: 184 x 55 Dia cm
Max Watts: 150 3way
*finish may vary
72567-364 MSRP $1,500

C

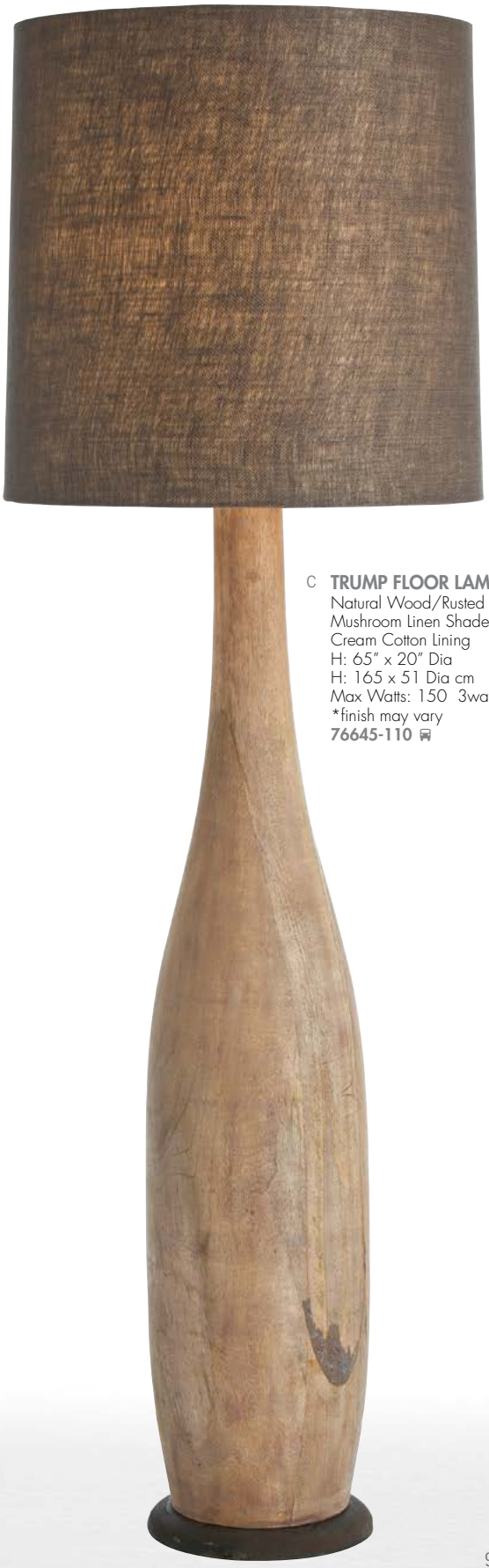

C **TRUMP FLOOR LAMP**
Natural Wood/Rusted Iron
Mushroom Linen Shade/
Cream Cotton Lining
H: 65" x 20" Dia
H: 165 x 51 Dia cm
Max Watts: 150 3way
*finish may vary
76645-110 MSRP $1,980

D

D **LINDEN FLOOR LAMP**
Walnut Wood
Off-White Linen Shade/Matching Lining
H: 71" x 20" Dia
H: 180 x 51 Dia cm
Max Watts: 150 3way
76492-333 MSRP $1,260

A

A **BABOLSAR FLOOR LAMP**
Black Waxed Iron/Matte Walnut Wood
H: 78" x 15.5"/8.5" Rect
H: 198 x 39/22 Rect cm
Max Watts (per socket): 100 Foot Switch
*double socket
*French wire
72082 MSRP $1,080

B

B **PAXTON FLOOR LAMP**
Natural Iron
Nautral Linen Shade/Smoke Gray Cotton Lining
H: 72" x 20" Dia
H: 183 x 51 Dia cm
Max Watts: 150 3way
*French wire
76552-259 MSRP $1,140

C

C **ELWOOD FLOOR LAMP**
Distressed Bronze/Natural Wood
Off-White Linen/Matching Lining
H: 63" x 21.5" Dia
H: 160 x 55 Dia cm
Max Watts: 150 3way
*finish may vary
72011-419 MSRP $2,100

D

D **ARNOT FLOOR LAMP**
Natural Iron
Natural Linen Shade/White Cotton Lining
H: 65" x 19" Dia
H: 165 x 48 Dia cm
Max Watts: 150 3way
*taupe cloth cord
*French wire
72010-987 MSRP $1,500

A

B

A **HANSEL FLOOR LAMP**
Natural Iron
Ivory Microfiber Shade/Matching Lining
H: 64.5" x 23" Dia
H: 164 x 58 Dia cm
Max Watts: 150 3way
73121-899 MSRP $1,740

B **BARNUM FLOOR LAMP**
Chimney Gray Iron
Light Gray Linen Shade/Matching Lining
H: 61" x 16" Dia
H: 155 x 41 Dia cm
Max Watts: 100 3way
73103-640 MSRP $1,350

C

D

C **NATHAN FLOOR LAMP**
Gesso Iron
Ivory Microfiber Shade/Matching Lining
H: 72" x 17" Dia
H: 183 x 43 Dia cm
Max Watts: 150 3way
*finish may vary
73141-139 MSRP $1,290

D **NATHAN FLOOR LAMP**
Natural Iron
White Parchment Shade
H: 72" x 17" Dia
H: 183 x 43 Dia cm
Max Watts: 150 3way
73142-140 MSRP $1,380

90

PERCENT IN-STOCK

Ships within 72 hours

CHANDELIERS, SCONCES AND PENDANTS

Often referred to as jewelry for the home, our lighting fixtures exemplify the Arteriors aesthetic. Our unique way of mixing metals, incorporating artisan techniques and playing with scale, results in an assortment of sophsticated designs that run the gamut from modern to traditional, classic to Avant-garde and casual to elegant… offering something for everyone.

Please note that many of our designs are damp rated, notated by the blue water drop icon next to the item number. This indicates that these fixtures are approved for use outdoors in covered spaces or in damp indoor spaces like bathrooms and spas. If you need extra pipe or chain you can find those coordinating parts on the Pipes and Chain Index on page 387.

A **WALDORF LARGE CHANDELIER**
8 Light/Vintage Silver/Fluted Triangular Glass Rods
Adj. H: 39.5" - 51.5" x 38" Dia
Adj H: 100 - 131 x 97 Dia cm
Max Watts (per socket): 40
*additional pipe PIPE-126
*shown with small clear tubular bulb
89030 MSRP $4,200

B

B

B **WALDORF SMALL CHANDELIER**
8 Light/Vintage Silver/Fluted Triangular Glass Rods
Adj. H: 29" - 47" x 23.5" Dia
Adj H: 74 - 119 x 60 Dia cm
Max Watts (per socket): 40
*additional pipe PIPE-126
*shown with small clear tubular bulb
89028 MSRP $3,000

C **WALDORF LARGE CHANDELIER**
8 Light/Antique Brass/Fluted Triangular Glass Rods
Adj. H: 39.5" - 51.5" x 38" Dia
Adj H: 100 - 131 x 97 Dia cm
Max Watts (per socket): 40
*additional pipe PIPE-101
*shown with small clear tubular bulb
89029 MSRP $4,200

C

D

D **WALDORF SMALL CHANDELIER**
8 Light/Antique Brass/Fluted Triangular Glass Rods
Adj. H: 29" - 47" x 23.5" Dia
Adj H: 74 - 119 x 60 Dia cm
Max Watts (per socket): 40
*additional pipe PIPE-101
*shown with small clear tubular bulb
89027 MSRP $3,000

A **HANLEY LARGE CHANDELIER**
8 Light/Fluted Triangular Glass Rods/Antique Brass
Adj. H: 44" - 56" x 37" Dia
Adj. H: 112 - 142 x 94 Dia cm
Max Watts (per socket): 40
*shown with frosted globe bulbs
*additional pipe PIPE-101
89012 MSRP $3,780

A

B

B **HANLEY SMALL CHANDELIER**
8 Light/Fluted Triangular Glass Rods/Antique Brass
Adj. H: 38.5" - 52" x 30" Dia
Adj. H: 98 - 132 x 76 Dia cm
Max Watts (per socket): 40
*shown with frosted globe bulbs
*additional pipe PIPE-101
89011 MSRP $3,000

C

C **HANLEY LARGE CHANDELIER**
8 Light/Fluted Triangular Glass Rods/Polished Nickel
Adj. H: 44" - 56" x 37" Dia
Adj. H: 112 - 142 x 94 Dia cm
Max Watts (per socket): 40
*shown with silver bowl globe bulbs
*additional pipe PIPE-100
89013 MSRP $3,780

D

D **HANLEY SMALL CHANDELIER**
8 Light/Fluted Triangular Glass Rods/Polished Nickel
Adj. H: 38.5" - 52" x 30" Dia
Adj. H: 98 - 132 x 76 Dia cm
Max Watts (per socket): 40
*shown with silver bowl globe bulbs
*additional pipe PIPE-100
89010 MSRP $3,000

A **ENYA CHANDELIER**
6 Light/Antique Brass/Frosted Glass
Adj. H: 28.5" - 46.5" x 26" Dia
Adj H: 72 - 118 x 66 Dia cm
Max Watts (per socket): 25
*additional pipe PIPE-101
89035 MSRP $3,600

B **ENYA CHANDELIER**
6 Light/Vintage Silver/Smoke Glass
Adj. H: 28.5" - 46.5" x 26" Dia
Adj H: 72 - 118 x 66 Dia cm
Max Watts (per socket): 25
*additional pipe PIPE-126
89045 MSRP $3,600

B

C **EMMY CHANDELIER**
8 Light/Antique Brass/Frosted Glass
Adj H: 34" - 52" x 24" Dia
Adj H: 86 - 132 x 61 Dia cm
Max Watts (per socket): 40
*shown with small clear tubular bulbs
*additional pipe PIPE-101
89049 MSRP $4,800

A WINDSOR SMITH COLLECTION
SATURNUS FIXED CHANDELIER
3 Light/Bronze/Antique Brass/Opal Glass
H: 32.5" x 14.5" Dia
H: 83 x 37 Dia cm
Max Watts (per socket): 25
DS89007 MSRP $2,100

B WINDSOR SMITH COLLECTION
SATURNUS FIXED CHANDELIER
3 Light/Antique Brass/Opal Glass
H: 32.5" x 14.5" Dia
H: 83 x 37 Dia cm
Max Watts (per socket): 25
DS89006 MSRP $2,100

D **DIALLO LARGE CHANDELIER**
8 Light/White Lacquered Resin/Antique Brass
Adj. H: 40" - 52" x 30" Dia
Adj. H: 102 - 132 x 76 Dia cm
Max Watts (per socket): 40
*shown with clear globe bulbs
*additional pipe PIPE-101
89992 MSRP $3,150

D

E

E **DIALLO SMALL CHANDELIER**
8 Light/White Lacquered Resin/Antique Brass
Adj. H: 36" - 48" x 24" Dia
Adj. H: 91 - 122 x 61 Dia cm
Max Watts (per socket): 40
*shown with silver bowl globe bulbs
*additional pipe PIPE-101
89986 MSRP $2,520

A

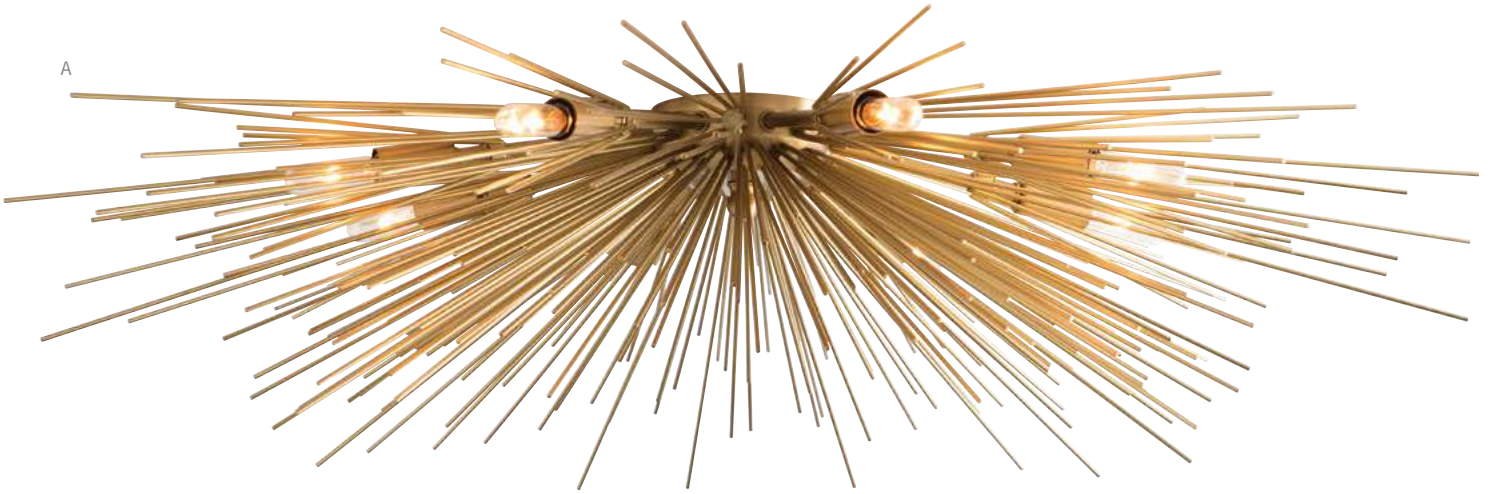

B

C

A **ROXANNE FLUSH MOUNT**
8 Light/Antique Brass
H: 8" x 35" Dia
H: 20 x 89 Dia cm
Max Watts (per socket): 40
*shown with small clear tubular bulbs
89969 MSRP $2,250

B **ZANADOO FIXED CHANDELIER**
12 Light/Antique Brass
H: 18.5" x 30" Dia
H: 47 x 76 Dia cm
Max Watts (per socket): 40
*shown with small clear tubular bulbs
89967 MSRP $2,400

C **ZANADOO LARGE CHANDELIER**
12 Light/Antique Brass
Adj. H: 33" - 45" x 33" Dia
Adj. H: 84 - 114 x 84 Dia cm
Max Watts (per socket): 40
*shown with frosted globe bulbs
*additional pipe PIPE-101
89991 MSRP $3,900

D **ZANADOO MINI CHANDELIER**
12 Light/Antique Brass
Adj. H: 18" - 50" x 16" Dia
Adj H: 46 - 127 x 41 Dia cm
Max Watts (per socket): 40
*shown with small clear tubular bulbs
*additional pipe PIPE-101
89001 MSRP $2,100

D

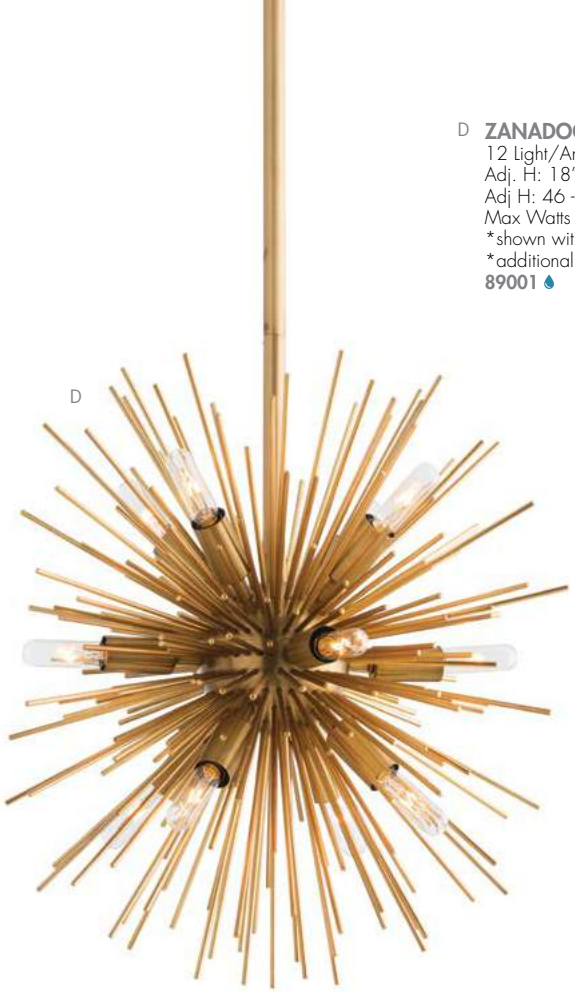

E **ZANADOO SMALL CHANDELIER**
12 Light/Antique Brass
Adj. H: 27" - 45" x 29" Dia
Adj. H: 69 - 114 x 74 Dia cm
Max Watts (per socket): 40
*shown with frosted globe bulbs
*additional pipe PIPE-101
89669 MSRP $2,700

E

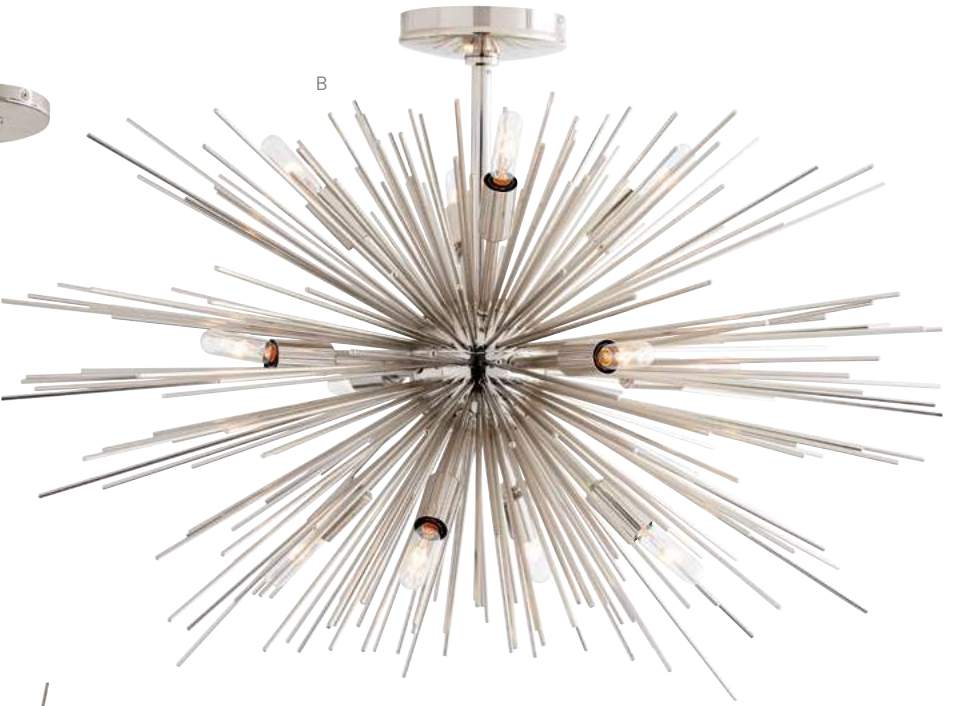

A **ROXANNE FLUSH MOUNT**
8 Light/Polished Nickel
H: 8" x 35" Dia
H: 20 x 89 Dia cm
Max Watts (per socket): 40
*shown with small clear tubular bulbs
89970 MSRP $2,250

B **ZANADOO FIXED CHANDELIER**
12 Light/Polished Nickel
H: 18.5" x 30" Dia
H: 47 x 76 Dia cm
Max Watts (per socket): 40
*shown with small clear tubular bulbs
89967 MSRP $2,400

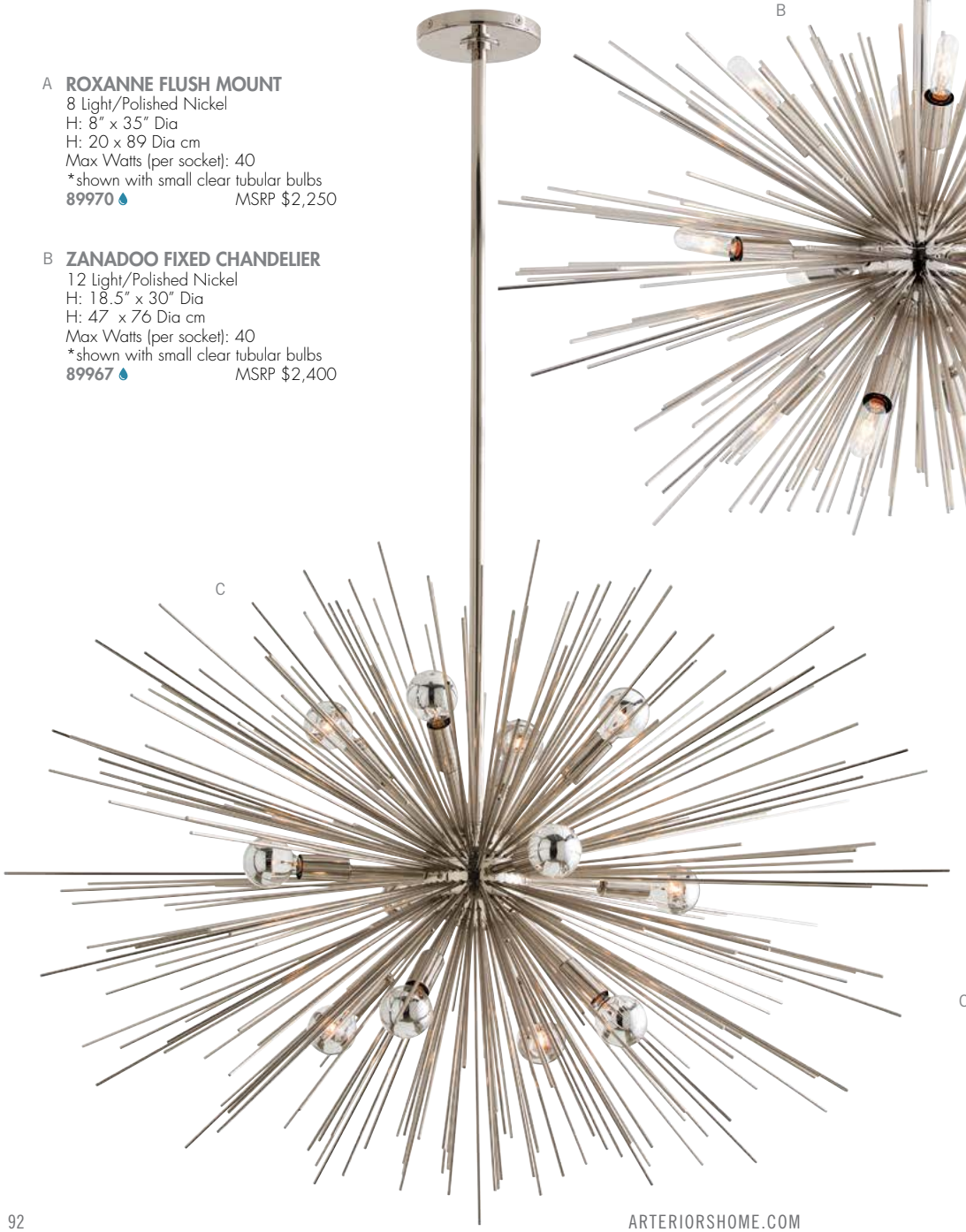

C **ZANADOO LARGE CHANDELIER**
12 Light/Polished Nickel
Adj. H: 33" - 45" x 33" Dia
Adj. H: 84 - 114 x 84 Dia cm
Max Watts (per socket): 40
*shown with silver bowl globe bulbs
*additional pipe PIPE-100
89989 MSRP $3,900

D **ZANADOO MINI CHANDELIER**
12 Light/Polished Nickel
Adj. H: 18" - 50" x 16" Dia
Adj H: 46 - 127 x 41 Dia cm
Max Watts (per socket): 40
*shown with small clear tubular bulbs
*additional pipe PIPE-100
89002 MSRP $2,100

D

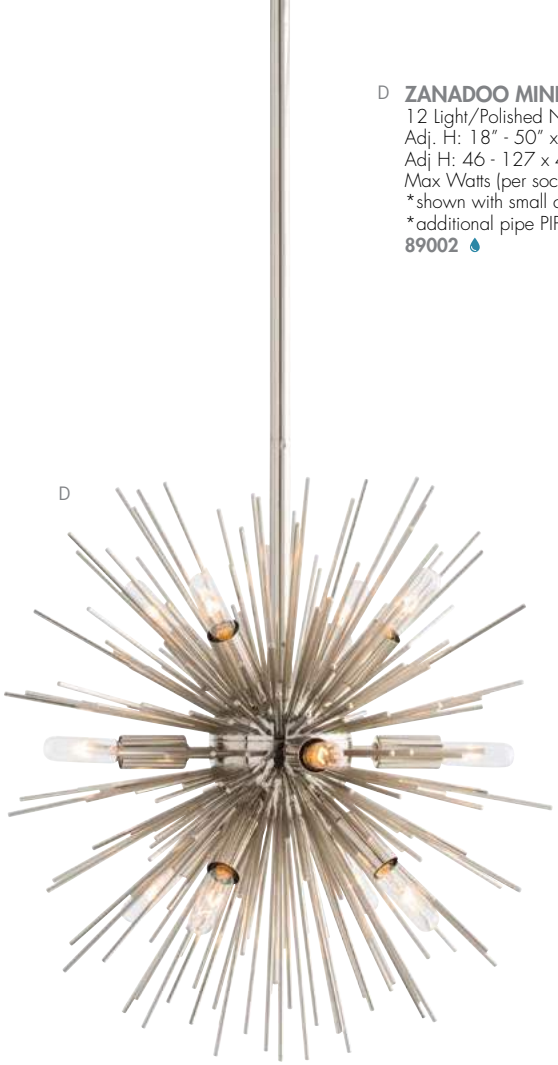

E

E **ZANADOO SMALL CHANDELIER**
12 Light/Polished Nickel
Adj. H: 27" - 45" x 29" Dia
Adj. H: 69 - 114 x 74 Dia cm
Max Watts (per socket): 40
*shown with silver bowl globe bulbs
*additional pipe PIPE-100
89670 MSRP $2,700

A

A **IMOGENE SMALL CHANDELIER**
24 Light/Polished Nickel/Clear Crystal/Black Steel
Adj. H: 37" - 49" x 26" Dia
Adj. H: 94 - 124 x 66 Dia cm
Max Watts (per socket): 25
*shown with clear small globe bulbs
*additional pipe PIPE-100
89977 MSRP $2,520

B

B **IMOGENE LARGE CHANDELIER**
24 Light/Polished Nickel/Clear Crystal/Black Steel
Adj. H: 46" - 58" x 42" Dia
Adj. H: 117 - 147 x 107 Dia cm
Max Watts (per socket): 25
*shown with clear small globe bulbs
*additional pipe PIPE-100
89978 MSRP $3,780

C **IMOGENE SMALL CHANDELIER**
24 Light/Vintage Brass/Clear Crystal/Black Steel
Adj. H: 37" - 49" x 26" Dia
Adj. H: 94 - 124 x 66 Dia cm
Max Watts (per socket): 25
*shown with clear small globe bulbs
*additional pipe PIPE-110
89976 MSRP $2,520

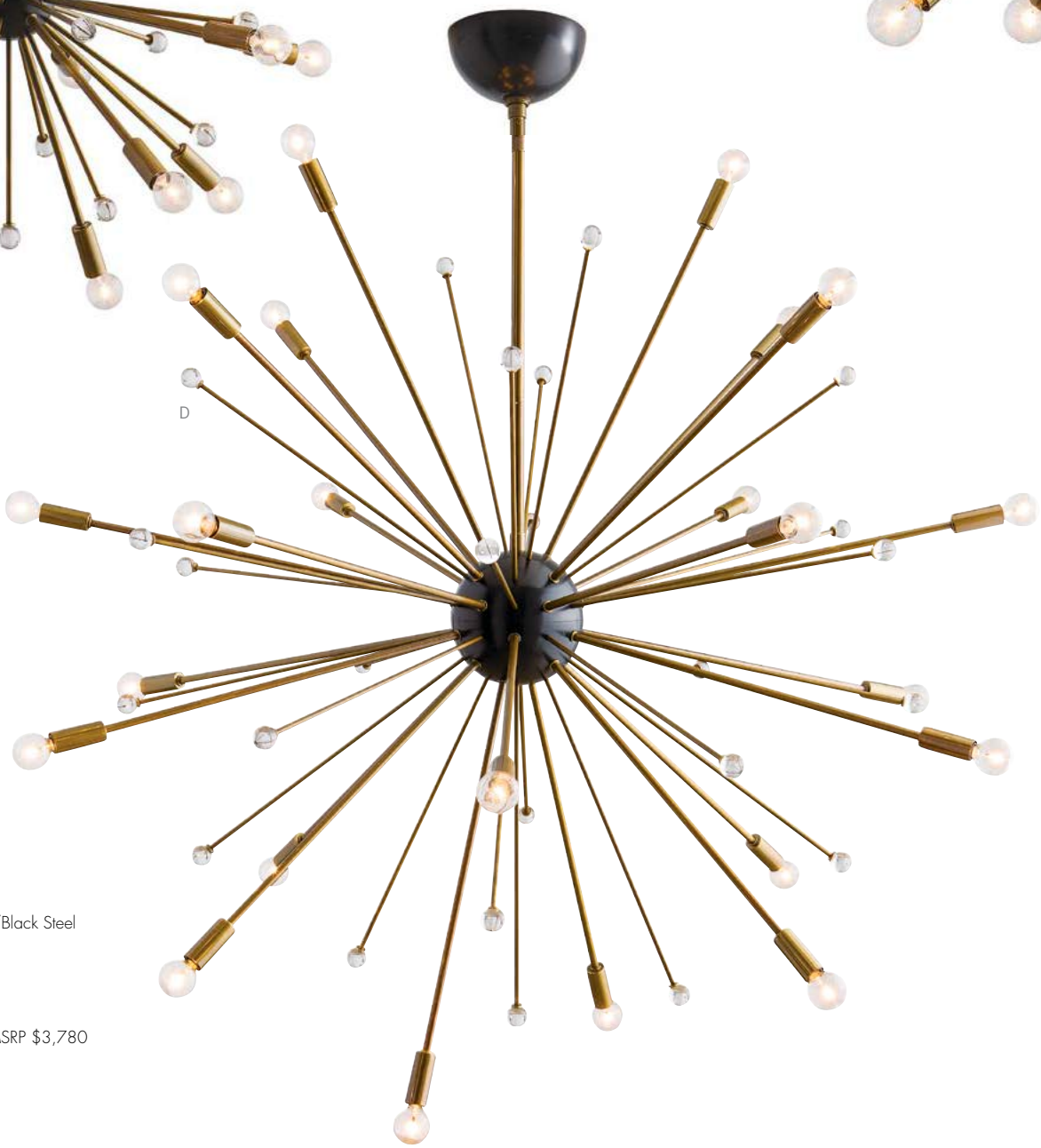

D **IMOGENE LARGE CHANDELIER**
24 Light/Vintage Brass/Clear Crystal/Black Steel
Adj. H: 46" - 58" x 42" Dia
Adj. H: 117 - 147 x 107 Dia cm
Max Watts (per socket): 25
*shown with small clear globe bulbs
*additional pipe PIPE-110
89979 MSRP $3,780

A **WINSTON FIXED CHANDELIER**
15 Light/Vintage Brass/Black Fabric Cord
H: 61" x 34" Dia
H: 155 x 86Dia cm
Max Watts (per socket): 60
*shown with antique medium tubular bulbs
89668 MSRP $3,000

A

B

B **KEEGAN LARGE CHANDELIER**
31 Light/Antique Brass
Adj. H: 53" - 59" x 45" Dia
Adj. H: 135 - 150 x 114 Dia cm
Max Watts (per socket): 25
*shown with Nostalgic thread bulbs/detail shown with frosted globe bulbs
*additional pipe PIPE-101
89018 MSRP $5,100

90% in stock, ships in 72 hours

A **DALLAS CHANDELIER**
18 Light/Vintage Brass/Seedy Glass/Swivel Arms
Adj. H: 8.5" - 32" x W: 58" x D: 45"
Adj. H: 22 - 81 x W: 147 x D: 114 cm
Max Watts (per socket): 25
*shown with small clear tubular bulbs
*additional pipe PIPE-110
89966 MSRP $4,410

A

B **SABINE CHANDELIER**
8 Light/Antique Brass/Clear Glass
Adj H: 20" - 50" x 30.5" Dia
Adj H: 51- 127 x 78 Dia cm
Max Watts (per socket): 40
*shown with small clear tubular bulbs
*additional pipe PIPE-132
49013 MSRP $2,550

B

C **DALLAS CHANDELIER**
18 Light/Brown Nickel/Smoke Glass/Swivel Arms
Adj. H: 8.5" - 32" x W: 58" x D: 45"
Adj. H: 22 - 81 x W: 147 x D: 114 cm
Max Watts (per socket): 25
*shown with small clear tubular bulbs
*additional pipe PIPE-103
89981 MSRP $4,500

C

D **DALLAS CHANDELIER**
18 Light/Polished Nickel/Clear Glass/Swivel Arms
Adj. H: 8.5" - 32" x W: 58" x D: 45"
Adj. H: 22 - 81 x W: 147 x D: 114 cm
Max Watts (per socket): 25
*shown with small clear tubular bulbs
*additional pipe PIPE-100
89032 MSRP $4,200

D

A **KARRINGTON CHANDELIER**
12 Light/Brown Nickel/Smoke Glass
Adj. H: 12" - 42" x 37" Dia
Adj. H: 30 - 107 x 94 Dia cm
Max Watts (per socket): 25
*shown with small clear globe bulbs
*additional pipe PIPE-103
89017 MSRP $3,150

A

B **KARRINGTON CHANDELIER**
12 Light/Polished Nickel/Clear Seedy Glass
Adj. H: 12" - 42" x 37" Dia
Adj H: 30 - 107 x 94 Dia cm
Max Watts (per socket): 25
*shown with small clear tubular bulbs
*additional pipe PIPE-100
89037 MSRP $3,150

B

C **KARRINGTON CHANDELIER**
12 Light/Antique Brass/Opal Glass
Adj. H: 12" - 42" x 37" Dia
Adj. H: 30 - 107 x 94 Dia cm
Max Watts (per socket): 25
*additional pipe PIPE-101
89016 MSRP $3,150

C

D **RAMIREZ CHANDELIER**
12 Light/Antique Brass/Seedy Glass
Adj. H: 27" - 45" x 39" Dia
Adj. H: 69 - 114 x 99 Dia cm
Max Watts (per socket): 40
*shown with radio bulbs
*additional pipe PIPE-101
89962 MSRP $3,900

D

A

A **VINCENT FIXED CHANDELIER**
13 Light/Vintage Silver/Opal Glass
H: 62" x 25" Dia
H: 157 x 64 Dia cm
Max Watts (per socket): 25
89004 MSRP $4,050

B **JALEN CHANDELIER**
9 Light/Vintage Silver/Frosted Glass
Adj. H: 15.5" - 33.5" x 30" Dia
Adj H: 39 - 89 x 76 cm
Max Watts (per socket): 40
*additional pipe PIPE-126
44077 MSRP $2,700

B

C

ALTERNATE VIEW

C **DECLAN CHANDELIER**
12 Light/Vintage Silver/Painted White Interior
Adj. H: 11" - 35" x W: 52.5" x D: 19.5"
H: 28 - 89 x W: 133 x D: 50 cm
Max Watts (per socket): 40
*shown with clear bent tip candlebra bulbs
*additional pipe PIPE-126
89036 MSRP $2,850

A

ALTERNATE CONFIGURATION

B

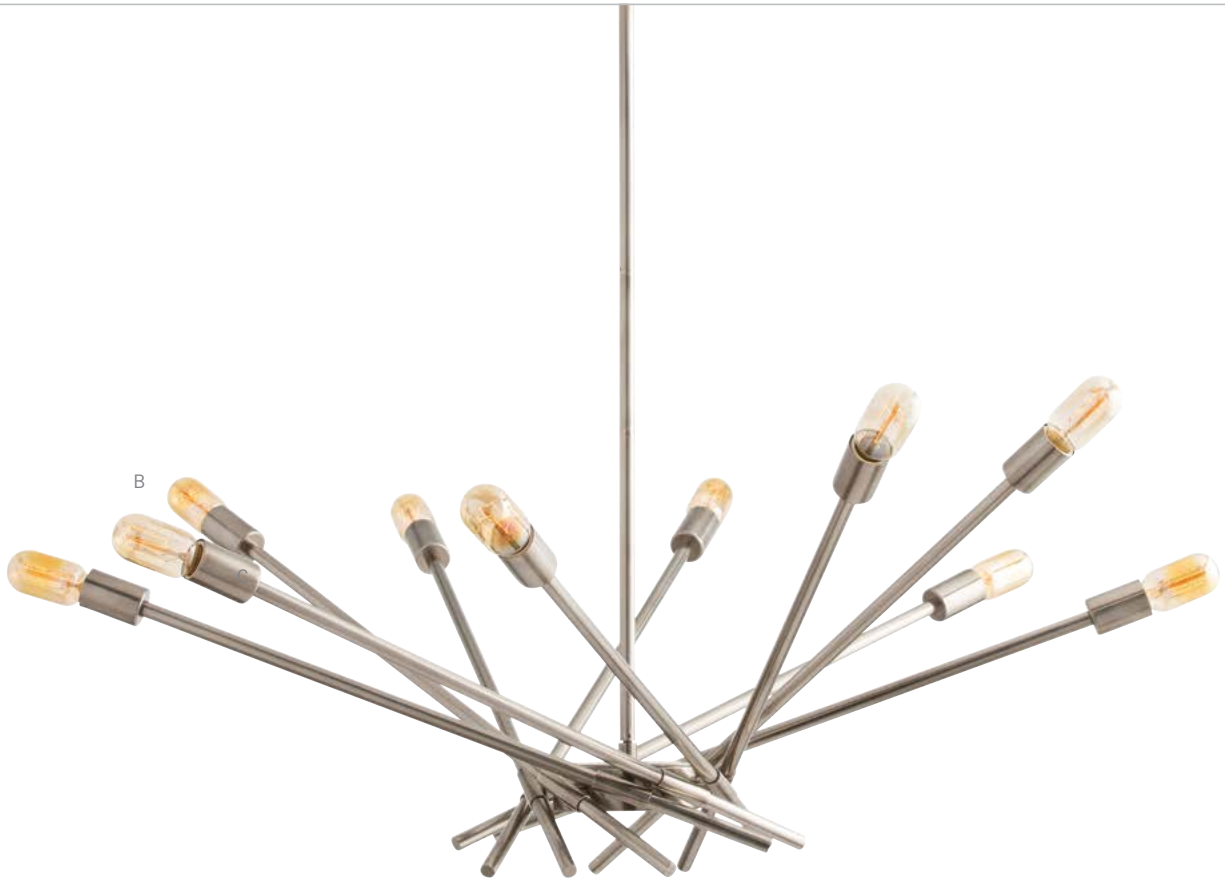

ALTERNATE CONFIGURATION

A **WEBSTER CHANDELIER**
10 Light/Antique Brass
Adj H: 16" - 38" x Adj Dia: 8.5" - 43"
Adj H: 41 - 97 x Adj Dia: 22 - 109 cm
Max Watts (per socket): 40
*shown with radio bulbs
*additional pipe PIPE-101
89006 MSRP $2,400

B **WEBSTER CHANDELIER**
10 Light/Vintage Silver
Adj H: 16" - 38" x Adj Dia: 8.5" - 43"
Adj H: 41 - 97 x Adj Dia: 22 - 109 cm
Max Watts (per socket): 40
*shown with radio bulbs
*additional pipe PIPE-126
89005 MSRP $2,400

C **VINCENT FIXED CHANDELIER**
13 Light/Antique Brass/Opal Glass
H: 62" x 25" Dia
H: 157 x 64 Dia cm
Max Watts (per socket): 25
89003 MSRP $4,050

A

ALTERNATE CONFIGURATION

A **DECLAN CHANDELIER**
12 Light/Bronze/Antique Brass/Painted White Interior
Adj. H: 11" - 35" x W: 52.5" x D: 19.5"
Adj. H: 28 - 89 x W: 133 x D: 50 cm
Max Watts (per socket): 40
*shown with clear bent tip candlebra bulbs
*additional pipe PIPE-105
89046 MSRP $2,250

B **JALEN CHANDELIER**
8 Light/Bronze/Vintage Brass/Frosted Glass
Adj. H: 13" - 43" x 29.5" Dia
Adj. H: 33 - 102 x 75 Dia cm
Max Watts (per socket): 40
*additional pipe PIPE-120
89974 MSRP $1,890

B

C **WARREN CHANDELIER**
4 Light/Bronze/Antique Brass/Opal Glass
Adj H: 15.5" - 33.5" x W: 36.5" x D: 25.5"
Adj H: 40 - 85 x W: 93 x D: 65 cm
Max Watts (per socket): 40
*additional pipe PIPE-101
89025 MSRP $1,650

D **WAHLBURG CHANDELIER**
6 Light/Bronze/Antique Brass/Opal Glass
Adj. H: 9" - 34" x W: 42" x Adj. D: 14" - 19"
Adj. H: 23 - 86 x W: 107 x Adj. D: 36 - 48 cm
Max Watts (per socket): 25
*additonal pipe PIPE-105
89026 MSRP $2,100

A

B

C

A **PATTON PENDANT**
3 Light/English Bronze/Antique Brass
H: 21" x 20" Dia
H: 53 x 51 Dia cm
Max Watts (per socket): 60
*additional chain CHN-971
46831 MSRP $1,200

B **NOLAN PENDANT**
1 Light/Vintage Brass/Bronze
H: 14" x 21.5" Dia
H: 36 x 55 Dia cm
Max Watts: 60
*additional chain CHN-885
44077 MSRP $1,410

C **BRAZOS CHANDELIER**
12 Light/Natural Iron/Polished Brass/Brass Welds
H: 25.5" x 24" Dia
H: 65 x 61 Dia cm
Max Watts (per socket): 25
*shown with small clear tubular bulbs
*additional chain CHN-116
84313 MSRP $2,700

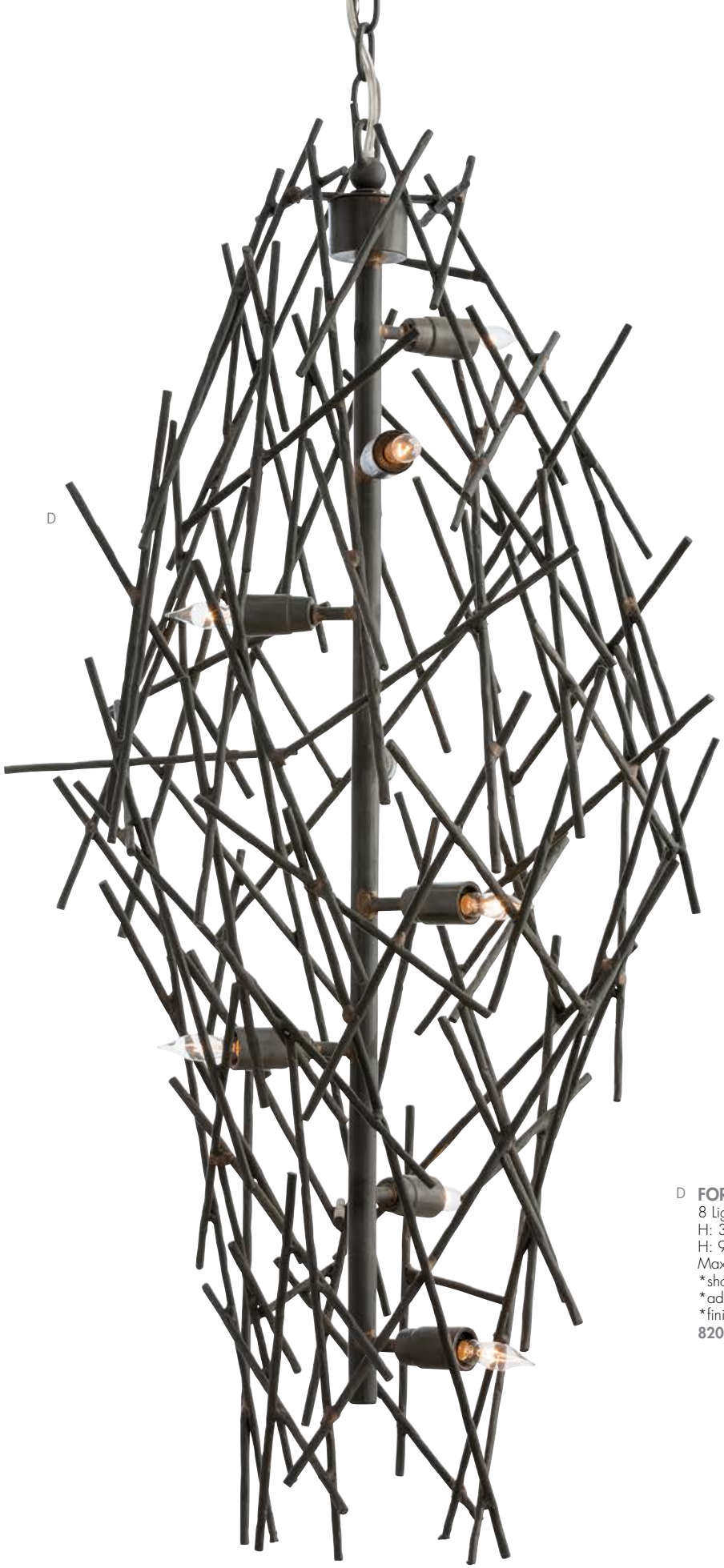

D

D **FORTNER CHANDELIER**
8 Light/Natural Iron/Brass Welds
H: 38.5" x 17" Dia
H: 98 x 43 Dia cm
Max Watts (per socket): 25
*shown with clear bent tip candlebra bulbs
*additional pipe CHN-124
*finish may vary
82003 MSRP $1,440

A **AUBURN CHANDELIER**
6 Light/Antique Brass
H: 27" x 27" Dia
H: 69 x 69 Dia cm
Max Watts (per socket): 40
*shown with clear globe bulbs
*additional chain CHN-928
89295 MSRP $2,280

A

B LAURA KIRAR COLLECTION
DOVE CHANDELIER
8 Light/Antique Brass/Clear Glass
H: 45" x 36" Dia
H: 114 x 91 Dia cm
Max Watts (per socket): 40
*shown with clear globe bulbs
*additional pipe PIPE-113
DK89951 MSRP $3,600

B

C **VALERIE CHANDELIER**
12 Light/Antique Brass/Seedy Glass
H: 35" x 38" Dia
H: 89 x 97 Dia cm
Max Watts (per socket): 40
*shown with frosted globe bulbs
*additional chain CHN-979
89024 MSRP $3,000

C

D WINDSOR SMITH COLLECTION
HERA OVAL CHANDELIER
8 Light/Antique Brass/Clear Glass
Adj. H: 13.5" - 43.5" x W: 43.5" x D: 27.5"
Adj. H: 34 - 110 x W: 110 x D: 70 cm
Max Watts (per socket): 60
*additional pipe PIPE-101
DS89000 MSRP $4,800

D

A **ELOISE CHANDELIER**
13 Light/Antique Brass/Seedy Glass
H: 51.5" x 25" Dia
H: 131 x 64 Dia cm
Max Watts (per socket): 25
*additional chain CHN-129
89701 MSRP $4,800

B **LECHTFORD CHANDELIER**
7 Light/Fluted Triangular Glass/Antique Brass
Adj. H: 33" - 57" x 20" Dia
Adj. H: 84 - 145 x 51 Dia cm
Max Watts (per socket): 60
*additional pipe PIPE-101
89014 MSRP $3,150

C **ROYALTON OVAL CHANDELIER**
4 Light/Antique Brass/Amber Ribbed Glass
Adj. H: 19" - 49" x W: 34" x D: 14"
Adj. H: 48 - 124 x W: 86 x D: 36 cm
Max Watts (per socket): 60
*additional pipe PIPE-101
49980 MSRP $4,740

B

C

A WINDSOR SMITH COLLECTION
HERA OVAL CHANDELIER
8 Light/Vintage Silver/Clear Glass
Adj. H: 13.5" - 43.5" x W: 43.5" x D: 27.5"
Adj. H: 34 - 110 x W: 110 x D: 70 cm
Max Watts (per socket): 60
*additional pipe PIPE-126
DS89001 MSRP $4,800

A

B **NESSA CHANDELIER**
8 Light/Polished Nickel/Fluted Glass
H: 31" x W: 40" x D: 15.5"
H: 79 x W: 102 x D: 39 cm
Max Watts (per socket): 60
*additional pipe PIPE-100
89009 MSRP $4,110

B

C

C **ROYALTON TALL PENDANT**
4 Light/Clear Glass/Polished Nickel
H: 26" x 10" Dia
H: 66 x 25 Dia cm
Max Watts (per socket): 40
*additional chain CHN-931
49865 MSRP $1,500

D **ROYALTON OVAL PENDANT**
4 Light/Clear Glass/Polished Nickel
Adj. H: 19" - 42.5" x W: 34" x D: 14"
Adj. H: 48 - 108 x W: 86 x D: 36 cm
Max Watts (per socket): 60
*additional pipe PIPE-118
49866 MSRP $3,000

D

A LAURA KIRAR COLLECTION
CAVIAR FIXED STAGGERED PENDANT
7 Light/Polished Nickel/Clear Glass
H: 40.5" x W: 36" x D: 19"
H: 103 x W: 91 x D: 48 cm
Max Watts (per socket): 40
DK89904 MSRP $3,600

A

B

B **SABINE CHANDELIER**
8 Light/Vintage Silver/Clear Glass
Adj H:20" - 50" x 30.5" Dia
Adj H: 51 - 127 x 78 Dia cm
Max Watts (per socket): 40
*shown with small clear tubular bulbs
*additional pipe PIPE-134
49012 MSRP $2,550

C

C **DUCHESS FIXED CHANDELIER**
12 Light/Smoke Glass/Polished Nickel
Matte Black Steel
H: 70.5" x 24" Dia
H: 179 x 61 Dia cm
Max Watts (per socket): 60
*shown with Edison bulbs
89998 MSRP $4,110

A

B

A LAURA KIRAR COLLECTION
CAVIAR ADJUSTABLE LARGE CLUSTER
8 Light/Polished Nickel/Clear Glass
Adj. H: 51" - 87" x 28.5" Dia
Adj. H: 130 - 221 x 72 Dia cm
Max Watts (per socket): 40
*additional chain CHN-960
DK89902 MSRP $4,500

B LAURA KIRAR COLLECTION
CAVIAR ADJUSTABLE LARGE CLUSTER
8 Light/Brown Nickel/Smoke Glass
Adj. H: 51" - 87" x 28.5" Dia
Adj. H: 130 - 221 x 72 Dia cm
Max Watts (per socket): 40
*additional chain CHN-961
DK89903 MSRP $4,500

C LAURA KIRAR COLLECTION
CAVIAR FIXED LARGE CLUSTER
8 Light/Polished Nickel/Clear Glass
H: 47" x 28.5" Dia
H: 119 x 72 Dia cm
Max Watts (per socket): 40
*additional chain CHN-960
DK89900 MSRP $4,200

C

D

D LAURA KIRAR COLLECTION
CAVIAR ADJUSTABLE MEDIUM CLUSTER
9 Light/Polished Nickel/Clear Glass
Adj. H: 48" - 84" x 21" Dia
Adj. H: 122 - 213 x 53 Dia cm
Max Watts (per socket): 25
*additional chain CHN-960
DK89907 MSRP $3,300

A

A **RITTENHOUSE LARGE CHANDELIER**
6 Light/Antique Silver/Taupe Sheer Scalloped Shade
H: 27" x 42" Dia
H: 69 x 107 Dia cm
Max Watts (per socket): 60
*additional chain CHN-935
89420 MSRP $3,480

B

B **RITTENHOUSE CHANDELIER**
6 Light/Antique Silver/Taupe Sheer Scalloped Shade
H: 22" x 26" Dia
H: 56 x 66 Dia cm
Max Watts (per socket): 60
*additional chain CHN-935
89408 MSRP $1,050

C **BRECK CHANDELIER**
12 Light/Antique Silver
H: 27" x 36" Dia
H: 69 x 91 Dia cm
Max Watts (per socket): 40
*shown with clear globe bulbs
*additional chain CHN-935
89416 MSRP $2,070

C

ALTERNATE VIEW

D **KAYLOR FIXED CHANDELIER**
18 Light/Antique Silver
H: 43" x 44" Dia
H: 109 x 112 Dia cm
Max Watts (per socket): 40
*shown with small clear tubular bulbs
*320 swivel sockets
86761 MSRP $6,000

D

A

B

A **BEATTY CHANDELIER**
4 Light/Bronze/Light Beige Linen Shade
H: 20" x W: 40" x D: 9"
H: 51 x W: 102 x D: 23 cm
Max Watts (per socket): 60
*additional chain CHN-950
89417 MSRP $1,230

B **DEVON CHANDELIER**
9 Light/Century Silver Leaf
H: 38" x 29" Dia
H: 97 x 74 Dia cm
Max Watts (per socket): 40
*shown with clear bent tip candelabra bulbs
*additional chain CHN-912
89305 MSRP $2,430

C

C **RITTENHOUSE CHANDELIER**
6 Light/Bronze/Light Beige Linen Scalloped Shade
H: 22" x 26" Dia
H: 56 x 66 Dia cm
Max Watts (per socket): 60
*additional chain CHN-950
89418 MSRP $1,050

D

D **RITTENHOUSE LARGE CHANDELIER**
6 Light/Bronze/Light Beige Linen Scalloped Shade
H: 27" x 42" Dia
H: 69 x 107 Dia cm
Max Watts (per socket): 60
*additional chain CHN-950
89421 MSRP $3,300

90% in stock, ships in 72 hours

A

A **MAXIM CHANDELIER**
7 Light/Dark Antique Brass
H: 46" x 22" Dia
H: 117 x 56 Dia cm
Max Watts (per socket): 60
*shown with clear globe bulbs
*additional chain CHN-942
89414 MSRP $3,300

B

B **DIAZ CHANDELIER**
5 Light/Antique Nickel
H: 37.5"x 20" Dia
H: 95 x 51 Dia cm
Max Watts (per socket): 40
*additional chain CHN-121
84060 MSRP $4,200

C **JAMES CHANDELIER**
9 Light/Antique Nickel
H: 39" x 23.5" Dia
H: 99 x 60 Dia cm
Max Watts (per socket): 40
*additional chain CHN-998
86782 MSRP $4,410

D **LAYLA PENDANT**
4 Light/Antique Brass/Nickel
H: 44" x W: 36" x D:16"
H: 112 x W: 91 x D: 41 cm
Max Watts (per socket): 60
*shown with Nostalgic spiral radio bulbs
*additional chain CHN-942
*finish may vary
46643 MSRP $4,410

C

D

A

B

A **REX PENDANT**
4 Light/Antique Brass
Adj. H: 7" - 37" x 19" Dia
Adj. H: 18 - 94 x 48 Dia cm
Max Watts (per socket): 25
*additional pipe PIPE-114
46821 MSRP $810

C

B **VIOLA CHANDELIER**
4 Light/Ivory Stained Crackle Resin Beads/
Antique Brass Wire
H: 29" x 20" Dia
H: 74 x 51 Dia cm
Max Watts (per socket): 40
*additional chain CHN-983
86764 MSRP $3,300

C **CHAPPELLET CHANDELIER**
12 Light/Ivory Stained Crackle Resin Beads/
Antique Brass Wire
H: 38" x 33" Dia
H: 97 x 84 Dia cm
Max Watts (per socket): 25
*additional chain CHN-118
84621 MSRP $6,900

D

D LAURA KIRAR COLLECTION
CHAINMAIL PENDANT
3 Light/Distressed Mercury Glass/Antique Brass
H: 32" x 15.5" Dia
H: 81 x 39 Dia cm
Max Watts (per socket): 25
*additional chain CHN-994
*finish may vary
DK42043 MSRP $1,590

E **ANALISE CHANDELIER**
8 Light/Vintage Brass/Frosted Acrylic Diffuser
Adj. H: 24" - 42" x 26" Dia
Adj. H: 61 - 107 x 66 Dia cm
Max Watts (per socket): 25
*additional pipe PIPE-140
84310 MSRP $3,300

E

A

A **FLORKO CHANDELIER**
8 Light/Gold Leafed Iron
H: 17.5" x 31" Dia
H: 48 x 79 Dia cm
Max Watts (per socket): 25
*additional pipe CHN-123
*finish may vary
82001 MSRP $2,100

B **FLORKO CHANDELIER**
8 Light/Silver Leafed Iron
H: 17.5" x 31" Dia
H: 48 x 79 Dia cm
Max Watts (per socket): 25
*additional pipe CHN-122
*finish may vary
82000 MSRP $2,100

B

A

B

A **ELIJAH CHANDELIER**
6 Light/Antique Brass
Ivory Cotton Shades
Adj H: 37.5" - 67.5" x 24" Dia
Adj H: 95 - 171 x 61 Dia cm
Max Watts (per socket): 60
*additional pipe PIPE-101
89038 MSRP $3,000

B **ELIJAH CHANDELIER**
6 Light/Vintage Silver
Ivory Cotton Shades
Adj H: 37.5" - 67.5" x 24" Dia
Adj H: 95 - 171 x 61 Dia cm
Max Watts (per socket): 60
*additional pipe PIPE-126
89048 MSRP $3,000

C

D

C LAURA KIRAR COLLECTION
BERTI PENDANT
2 Light/Antique Brass/Frosted Glass
H: 48" x 8" Dia
H: 122 x 20 Dia cm
Max Watts (per socket): 40
*additional pipe PIPE-121
DK46023 MSRP $2,520

D **EARNHARDT CHANDELEIR**
6 Light/Antique Brass/Frosted Glass Diffusers
Adj. H: 32" - 56" x 11.5" Dia
Adj. H: 81 - 142 x 29 Dia cm
Max Watts (per socket): 25
*additional pipe PIPE-101
49034 MSRP $1,350

A **CAMDEN PENDANT**
5 Light/Gold Leafed Iron
H: 25" x 30" Dia
H: 64 x 76 Dia cm
Max Watts (per socket): 60
*additional chain CHN-117
*finish may vary
84620 MSRP $2,400

A

B **VAUGHN FIXED CHANDELIER**
14 Light/Bronze/Gold Leafed Steel
H: 43" x 39" Dia
H: 109 x 99 Dia cm
Max Watts (per socket): 40
89995 MSRP $2,670

B

C **MARSHA CHANDELIER**
6 Light/Black Microfiber/Antique Brass/Acrylic Diffuser
Adj. H: 26"- 56" x 36" Dia
Adj. H: 66 - 142 x 91 Dia cm
Max Watts (per socket): 40
*black cloth cord
89023 MSRP $2,850

C

D **DANTE CHANDELIER**
5 Light/Antique Brass/Frosted Acrylic
H: 44" x 42" Dia
H: 112 x 107 Dia cm
Max Watts (per socket): 60
*additional chain CHN-129
89702 MSRP $4,200

D

A

B

C

A **HOLLACE CHANDELIER**
6 Light/Burnished Silver Iron
H: 24.5" x 21.5" Dia
H: 62 x 55 Dia cm
Max Watts (per socket): 40
*shown with clear bent tip candelabra bulbs
*additional chain CHN-984
84315 MSRP $1,590

B **AIDEN CHANDELIER**
15 Light/Burnt Waxed Iron/Seedy Glass
H: 31" x 21" Dia
H: 79 x 53 Dia cm
Max Watts (per socket): 25
*shown with small clear tubular bulb
*additional chain CHN-119
84622 MSRP $1,500

C **OSGOOD PENDANT**
1 Light/Antiqued Gold Leafed Iron
H: 16" x 14" Dia
H: 41 x 36 Dia cm
Max Watts: 150
*additional chain CHN-973
*finish may vary
46576 MSRP $900

D

E

D **PRESCOTT PENDANT**
3 Light/Gold Leafed Iron
H: 14.5" x 22" Dia
H: 37 x 56 Dia cm
Max Watts (per socket): 100
*additional chain CHN-886
*finish may vary
86801 MSRP $1,740

E **PAYNE CHANDELIER**
7 Light/Gold Leafed Iron
H: 11.5" x 17" Dia
H: 29 x 43 Dia cm
Max Watts (per socket): 25
*additional chain CHN-886
*finish may vary
86800 MSRP $1,950

F LAURA KIRAR COLLECTION
VANITY PENDANT
13 Light/Gold Leafed Iron/Antiqued Mirror
Adj. H: 20" - 44" x 24" Dia
Adj. H: 51 - 112 x 61 Dia cm
Max Watts (per socket): 40
*additional pipe PIPE-128
*finish may vary
DK46027 MSRP $2,700

F

A

A **HARDING CHANDELIER**
48 Light/Bronze
H: 26″ x W: 40″ x D: 30″
H: 66 x W: 102 x D: 76 cm
Max Watts (per socket): 15
*shown with small clear globe bulbs
89985 MSRP $4,110

B **DIRK FIXED CHANDELIER**
16 Light/Dark Aged Iron
H: 36″ x 36″ Dia
H: 91 x 91 Dia cm
Max Watts (per socket): 40
*shown with radio bulbs
89994 MSRP $3,780

B

C

C **DAX CHANDELIER**
6 Light/Bronze/Antique Brass
H: 19.5" x 16.5" Sq
H: 50 x 42 cm Sq
Max Watts (per socket): 60
*shown with radio bulbs
*additional chain CHN-120
89034 MSRP $1,500

D

D **ESTELLE CHANDELIER**
3 Light/Bronze/Faceted Crystal
Adj H: 40.5" - 64.5" x 17" Dia
Adj H: 103 - 164 x 43 Dia cm
Max Watts (per socket): 60
*additional pipe PIPE-145
*black cloth cord
89700 MSRP $2,700

E

E **VICKERY CHANDELIER**
8 Light/Matte Black/Matte White/Satin Nickel
Adj. H: 24" - 42.5" x 28" Dia
Adj. H:61 - 108 x 71 Dia cm
Max Watts (per socket): 40
*shown with clear globe bulbs
*additional pipe PIPE-135
89008 MSRP $2,400

A **MCINTYRE TWO TIERED CHANDELIER**
10 Light/Natural Iron/Jute Wrapped Cord
H: 43" x 56" Dia
H: 109 x 142 Dia cm
Max Watts (per socket): 60
*shown with Edison bulbs
*additional chain CHN-975
84176 MSRP $4,200

B **PARRISH CHANDELIER**
3 Light/Antique Bronze/Clear Glass
Adj. H: 25.5" - 49.5" x 23" Dia
Adj H: 65 - 126 x 58 Dia cm
Max Watts (per socket): 60
*shown with Edison bulbs
*additional pipe PIPE-107
89033 MSRP $1,500

B

C **MCINTYRE CHANDELIER**
5 Light/Natural Iron/Jute Wrapped Cord
H: 29.5" x 34.5" Dia
H: 75 x 88 Dia cm
Max Watts (per socket): 40
*shown with Edison bulbs
*addtional chain CHN-975
86786 MSRP $2,100

C

A **GEOFFREY THREE TIER CHANDELIER**
27 Light/Gray Wood/Rusted Iron
H: 64.5" x 36" Dia
H: 164 x 91 Dia cm
Max Watts (per socket): 25
*shown with Edison bulbs
*additional chain CHN-987
84173 MSRP $3,600

B **GEOFFREY SMALL CHANDELIER**
12 Light/Gray Wood/Rusted Iron
H: 34" x 36" Dia
H: 86 x 91 Dia cm
Max Watts (per socket): 40
*shown with Edison bulbs
*additional chain CHN-987
84171 MSRP $1,950

C **GEOFFREY MEDIUM CHANDELIER**
12 Light/Gray Wood/Rusted Iron
H: 38" x 48" Dia
H: 97 x 122 Dia cm
Max Watts (per socket): 25
*shown with Edison bulbs
*additional chain CHN-987
84174 MSRP $2,550

D **GEOFFREY LARGE CHANDELIER**
20 Light/Gray Wood/Rusted Iron
H: 40.5" x 60" Dia
H: 103 x 152 Dia cm
Max Watts (per socket): 25
*shown with Edison bulbs
*additional chain CHN-987
84175 MSRP $3,600

A

A **FINCH CHANDELIER**
8 Light/Natural Wood/Natural Iron
H: 45" x 43" Dia
H: 114 x 109 Dia cm
Max Watts (per socket): 40
*shown with small clear tubular bulbs
*additional chain CHN-128
*finish may vary
89560 MSRP $2,850

B

C

D

B **EVERS PENDANT**
1 Light/Natural Sea Grass
H: 27" x 15" Dia
H: 69 x 38 Dia cm
Max Watts: 60
*sea grass wrapped cord
49206 MSRP $780

C **JARROD SMALL PENDANT**
1 Light/Natural Waxed Wood/Plain Mirror Interior
H: 22" x 22" Dia
H: 56 x 56 Dia cm
Max Watts: 150
*additional chain CHN-980
86738 MSRP $930

D **JARROD LARGE PENDANT**
1 Light/Natural Waxed Wood/Plain Mirror Interior
H: 29.5" x 30.5" Dia
H: 75 x 77 Dia cm
Max Watts: 150
*additional chain CHN-975
89324 MSRP $1,860

A

A **TILDA CHANDELIER**
5 Light/Whitewashed Wood/White Iron
H: 30" x 21" Dia
H: 76 x 53 Dia cm
Max Watts (per socket): 25
*additional chain CHN-959
*finish may vary
89559 MSRP $1,980

B

B **TILDA PENDANT**
1 Light/Whitewashed Wood/White Iron
H: 27.5" X 15" Dia
H: 70 x 38 Dia cm
Max Watts: 60
*additional chain CHN-127
*finish may vary
49558 MSRP $1,200

C **JARROD LARGE PENDANT**
1 Light/Whitewashed Wood/Plain Mirror Interior
H: 29.5" x 30.5" Dia
H: 75 x 77 Dia cm
Max Watts: 150
*additional chain CHN-947
86720 MSRP $1,860

C

D

D **JARROD SMALL PENDANT**
1 Light/Whitewashed Wood/Plain Mirror Interior
H: 22" x 22" Dia
H: 56 x 56 Dia cm
Max Watts: 150
*additional chain CHN-947
86719 MSRP $930

A **REMUS SMALL PENDANT**
1 Light/Walnut Wood Finish/Blackened Iron
H: 48" x 26" Dia
H: 122 x 66 Dia cm
Max Watts: 60
*shown with Nostalgic thread bulb
*additional chain CHN-101
45102 MSRP $3,000

B **REMUS LARGE PENDANT**
1 Light/Walnut Wood Finish/Blackened Iron
H: 52" x 40" Dia
H: 132 x 102 Dia cm
Max Watts: 60
*shown with Nostalgic thread bulb
*additional chain CHN-101
45103 MSRP $4,500

C **ROOK SMALL PENDANT**
1 Light/Natural Wood Finish/Blackened Iron
H: 60" x 24" Dia
H: 152 x 61 Dia cm
Max Watts: 60
*shown with 4" frosted globe bulb
*additional chain CHN-101
*finish may vary
45101 MSRP $3,000

C

D **ROOK LARGE PENDANT**
6 Light/Natural Wood Finish/Blackened Iron
H: 60" x 35" Dia
H: 152 x 89 Dia cm
Max Watts (per socket): 60
*shown with Nostalgic thread bulbs
*additional chain CHN-101
*finsh may vary
45100 MSRP $6,600

D

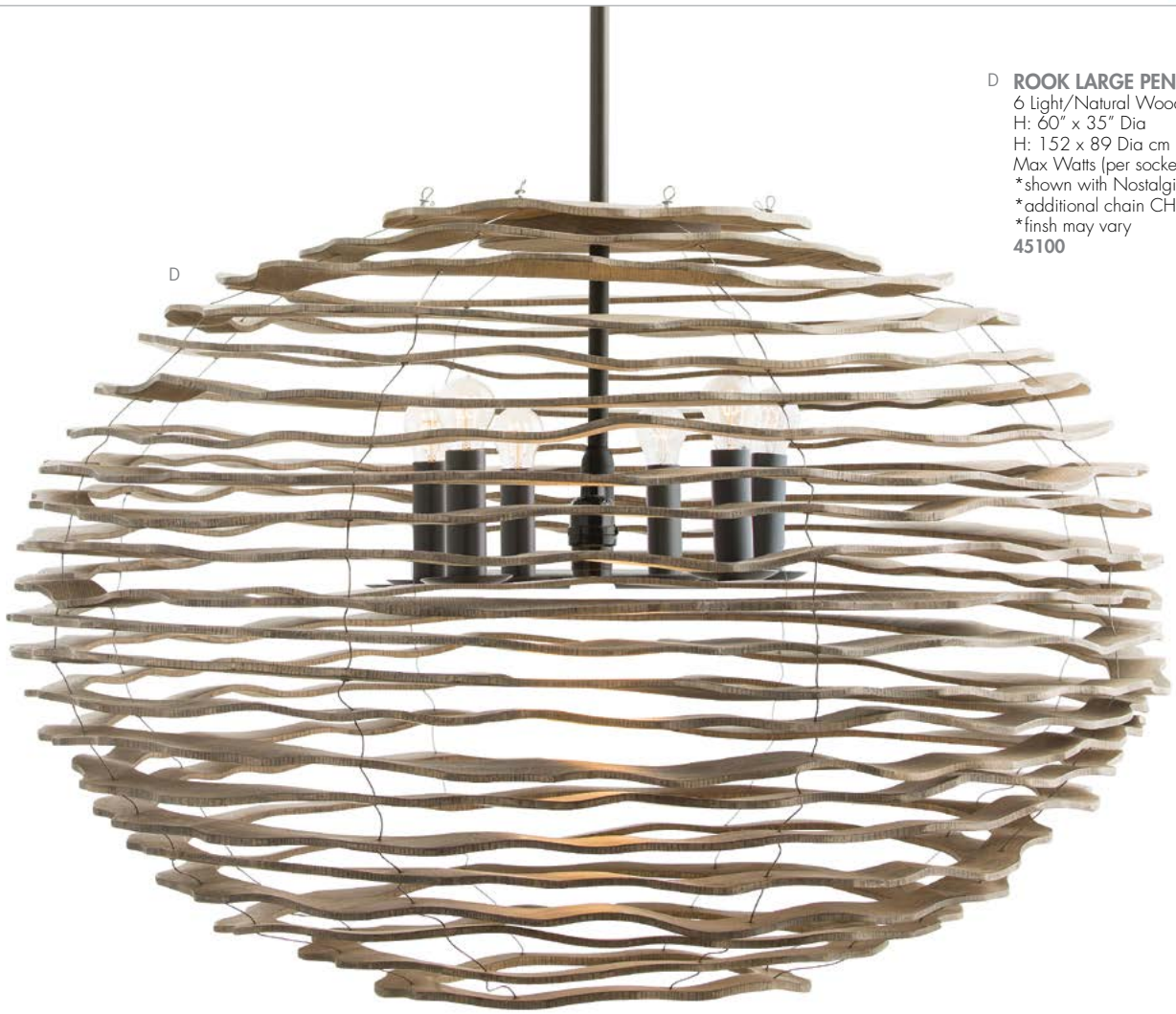

A

A **THORNTON PENDANT**
4 Light/Bronze/Clear Glass
Adj. H: 16" - 53" x W: 49" x D: 7"
Adj. H: 41 - 135 x W: 124 x D: 18 cm
Max Watts (per socket): 60
*shown with Edison bulbs
*additional pipe PIPE-105
89625 MSRP $1,800

B

B **EDMOND PENDANT**
1 Light/Antique Brass/Clear Glass
H: 22" x 16" Dia
H: 56 x 41 Dia cm
Max Watts: 60
*shown with radio bulb
*additional chain CHN-955
46361 MSRP $1,170

C

C **THORNTON PENDANT**
4 Light/Aged Iron/Clear Glass
Adj. H: 16" - 53" x W: 49" x D: 7"
Adj. H: 41 - 135 x W: 124 x D: 18 cm
Max Watts (per socket): 60
*shown with Edison bulbs
*additional pipe PIPE-108
89624 MSRP $1,800

D

D **SAVANNAH PENDANT**
4 Light/Aged Iron/Clear Glass
Adj. H: 40" - 69" x 14" Sq
Adj. H: 102 - 175 x 36 Sq cm
Max Watts (per socket): 60
*shown with Edison bulbs
*additional pipe PIPE-109
89626 MSRP $1,260

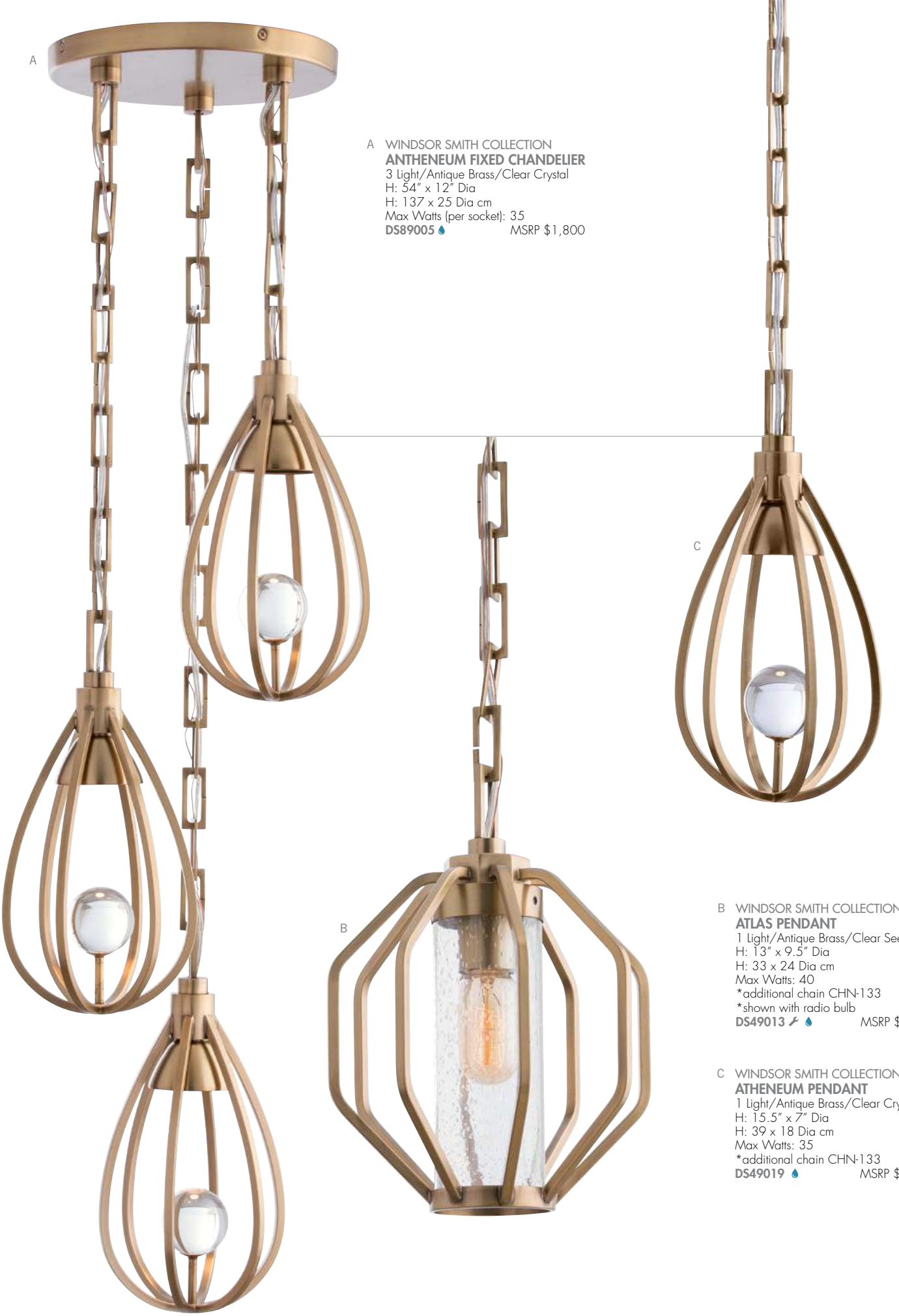

A WINDSOR SMITH COLLECTION
ANTHENEUM FIXED CHANDELIER
3 Light/Antique Brass/Clear Crystal
H: 54" x 12" Dia
H: 137 x 25 Dia cm
Max Watts (per socket): 35
DS89005 MSRP $1,800

B WINDSOR SMITH COLLECTION
ATLAS PENDANT
1 Light/Antique Brass/Clear Seedy
H: 13" x 9.5" Dia
H: 33 x 24 Dia cm
Max Watts: 40
*additional chain CHN-133
*shown with radio bulb
DS49013 MSRP $705

C WINDSOR SMITH COLLECTION
ATHENEUM PENDANT
1 Light/Antique Brass/Clear Crystal
H: 15.5" x 7" Dia
H: 39 x 18 Dia cm
Max Watts: 35
*additional chain CHN-133
DS49019 MSRP $705

D

F

D WINDSOR SMITH COLLECTION
ATHENEUM PENDANT
1 Light/Vintage Silver/Clear Crystal
H: 15.5" x 7" Dia
H: 39 x 18 Dia cm
Max Watts: 35
*additional chain CHN-132
DS49018 MSRP $705

E

E WINDSOR SMITH COLLECTION
ATLAS PENDANT
1 Light/Vintage Silver/Clear Seedy
H: 13" x 9.5" Dia
H: 33 x 24 Dia cm
Max Watts: 40
*additional chain CHN-132
*shown with radio bulb
DS49011 MSRP $705

F WINDSOR SMITH COLLECTION
ANTHENEUM FIXED CHANDELIER
3 Light/Vintage Silver/Clear Crystal
H: 54" x 12" Dia
H: 137 x 25 Dia cm
Max Watts (per socket): 35
DS89004 MSRP $1,800

A

B

C

D

A **MARA LARGE PENDANT**
1 Light/Polished Brass
Adj. H: 27" - 51" x 23.5" Dia
Adj. H: 69 - 130 x 60 Dia cm
Max Watts: 60
*shown with Edison bulb
*additional pipe PIPE-123
41002 MSRP $1,500

B **MARA SMALL PENDANT**
1 Light/Polished Brass
Adj. H: 19.5" - 43.5" x 13" Dia
Adj. H: 50 - 110 x 33 Dia cm
Max Watts: 60
*shown with Edison bulb
*additional pipe PIPE-123
41001 MSRP $900

C **MARA LARGE PENDANT**
1 Light/Polished Nickel
Adj. H: 27" - 51" x 23.5" Dia
Adj. H: 69 - 130 x 60 Dia cm
Max Watts: 60
*shown with Edison bulb
*additional pipe PIPE-127
41004 MSRP $1,500

D **MARA SMALL PENDANT**
1 Light/Polished Nickel
Adj. H: 19.5" - 43.5" x 13" Dia
Adj. H: 50 - 110 x 33 Dia cm
Max Watts: 60
*shown with Edison bulb
*additional pipe PIPE-127
41003 MSRP $900

E WINDSOR SMITH COLLECTION
DOLMA CHANDELIER
1 Light/Polished Brass
H: 58" x 21.5" Dia
H: 147 x 55 Dia cm
Max Watts: 100
*additional chain CHN-126
*shown with 5" frosted globe bulb
DS84000 MSRP $4,650

F **ADELE PENDANT**
1 Light/Bronze/Polished Nickel
H: 25" x W: 19" x Adj. D:1.5" - 18"
H: 64 x W: 48 x Adj. D: 4 - 46 cm
Max Watts: 60
*shown with an Edison bulb
*additional chain CHN-946
46829 MSRP $1,110

G **NICO PENDANT**
1 Light/Polished Nickel
H: 17.5" x W: 13.5" x Adj. D: 1" - 12.5"
H: 44 x W: 34 x Adj. D: 3 - 32 cm
Max Watts: 60
*shown with a large antique tubular bulb
*additional chain CHN-999
44043 MSRP $690

E

F

G

A **TARTAN PENDANT**
2 Light/Bronze/Polished Nickel
H: 6" x 15.5" Dia
H: 15 x 39 Dia cm
Max Watts (per socket): 60
*taupe fabric cord
46658 MSRP $750

B **DRAKE PENDANT**
3 Light/Bronze/Antique Brass/
Copper Interior
H: 22" x 24" Dia
H: 56 x 61 Dia cm
Max Watts (per socket): 40
*additional pipe CHN-125
42084 MSRP $1,800

C **ANDERSON PENDANT**
3 Light/English Bronze/Diffuser
H: 12" x 24" Dia
H: 30 x 61 Dia cm
Max Watts (per socket): 40
*additional chain CHN-946
42466 MSRP $1,155

D **ZIGGY PENDANT**
3 Light/White Iron/Diffuser
H: 12" x 24" Dia
H: 30 x 61 Dia cm
Max Watts (per socket): 40
*additional chain CHN-947
46806 MSRP $930

E

F

G

E **ZIGGY SMALL PENDANT**
1 Light/White Iron/Brass Plated Interior
H: 12.5" x 10" Dia
H: 32 x 25 Dia cm
Max Watts: 60
*taupe fabric cord
46780 MSRP $315

F **VVMARIO PENDANT**
1 Light/Bronze
H: 11.5" x 9" Dia
H: 29 x 23 Dia cm
Max Watts: 60
*taupe fabric cord
42415 MSRP $300

G **EARL PENDANT**
1 Light/Opal Glass/Burnt Wax Iron
Adj. H: 20" - 44" x 7" Dia
Adj. H: 51 - 112 cm x 18 Dia cm
Max Watts: 40
*additional pipe PIPE-142
44009 MSRP $450

H

I

J

H **MASON SMALL PENDANT**
1 Light/Dark Silver Iron/Brass Welds
H: 12.5" x 10" Dia
H: 32 x 25 Dia cm
Max Watts: 60
*taupe cloth cord
42413 MSRP $360

I **MASON WIDE PENDANT**
1 Light/Dark Silver Iron/Brass Welds
H: 13" x 13" Dia
H: 33 x 33 Dia cm
Max Watts: 60
*taupe cloth cord
42414 MSRP $435

J **OPHELIA PENDANT**
1 Light/Natural Iron/Brass Welds
H: 15.5" x 8.5" Dia
H: 39 x 22 Dia cm
Max Watts: 60
*taupe cloth cord
44065 MSRP $360

A **GARRISON ROUND PENDANT**
1 Light/Clear Glass/Antique Brass
H: 11.5" x 9.5" Dia
H: 29 x 24 Dia cm
Max Watts: 60
*shown with medium clear tubular bulb
*taupe cloth cord
44071 MSRP $570

B **GARRISON CYLINDRICAL PENDANT**
1 Light/Clear Glass/Antique Brass
H: 14.5" x 6" Dia
H: 37 x 15 Dia cm
Max Watts: 60
*shown with medium antique tubular bulb
*taupe cloth cord
44073 MSRP $510

C **PIERCE LARGE PENDANT**
1 Light/Antique Brass/Clear Glass
H: 18" x 7" Dia
H: 46 x 18 Dia cm
Max Watts: 25
42502 MSRP $345

D **NOREEN PENDANT**
1 Light/Smoke Luster Glass/Antique Brass
H: 17" x 10" Dia
H: 43 x 25 Dia cm
Max Watts: 60
*shown with Nostalgic thread bulb
*taupe cloth cord
*finish may vary
44081 MSRP $630

E **ALBERT PENDANT**
1 Light/Smoke Luster Glass/Vintage Brass
Adj. H: 17.5" - 47.5" x 9" Dia
Adj. H: 44 - 121 x 23 Dia cm
Max Watts: 40
*shown with Edison bulb
*additional pipe PIPE-137
*finish may vary
44083 MSRP $510

F **DOREEN PENDANT**
1 Light/Smoke Luster/Antique Brass
H: 17.5" x 8.5" Dia
H: 44 x 22 Dia cm
Max Watts: 40
*shown with medium antique tubular bulb
*taupe cloth cord
*finish may vary
44084 MSRP $600

G **ARIANNA LARGE PENDANT**
1 Light/Antique Mercury Glass
H: 18.5" x 7" Dia
H: 47 x 18 Dia cm
Max Watts: 25
*finish may vary
42514 MSRP $360

H **MONICA PENDANT**
1 Light/Sand Infused Glass/Antique Brass
H: 12.5" x 9.5" Dia
H: 32 x 24 Dia cm
Max Watts: 40
*shown with Nostalgic thread bulb
*taupe cloth cord
44082 MSRP $450

I **WESLEY PENDANT**
1 Light/Vintage Glass/Vintage Brass/Jute Wrapped Cord
H: 10" x 7" Dia
H: 25 x 18 Dia cm
Max Watts: 40
*shown with antique tubular bulb
46758 MSRP $360

J LAURA KIRAR COLLECTION
BILBAO FISHTAIL PENDANT
1 Light/Gold Ombre Glass/Vintage Brass
H: 20" x 4.5" Dia
H: 51 x 11 Dia cm
Max Watts: 25
*finish may vary
DK46020 MSRP $510

K **DWIGHT PENDANT**
1 Light/Smoke Etched Glass
H: 14.5" x 9" Dia
H: 37 x 23 Dia cm
Max Watts: 25
*taupe cloth cord
*finish may vary
47555 MSRP $510

L **EZRA PENDANT**
1 Light/Frosted Glass/Brushed Nickel
Adj. H: 24" - 48" x 7" Dia
Adj. H: 61 - 122 x 18 Dia cm
Max Watts: 40
*additional pipe PIPE-143
*finish may vary
44016 MSRP $540

A LAURA KIRAR COLLECTION
ICE LARGE PENDANT
1 Light/Etched Clear Glass/Antiqued Brass
H: 17" x 6.5" Dia
H: 43 x 17 Dia cm
Max Watts: 40
*shown with large clear tubular bulb
DK42047 MSRP $870

B LAURA KIRAR COLLECTION
ICE SMALL PENDANT
1 Light/Etched Clear Glass/Antiqued Brass
H: 11" x 4.5" Dia
H: 28 x 11 Dia cm
Max Watts: 25
*shown with clear tubular bulb
DK42050 MSRP $525

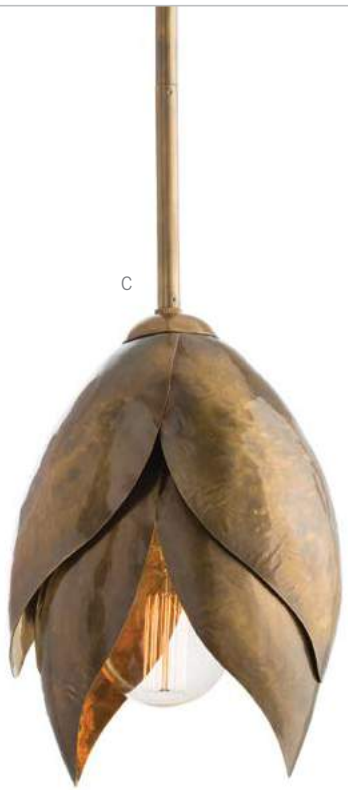

C **EDITH PENDANT**
1 Light/Vintage Brass
Adj H: 21" - 45" x W: 8" x D: 6"
Adj H: 53 - 114 x W: 20 x D: 15 cm
Max Watts: 60
*additional pipe PIPE-144
*shown with nostalgic loop bulb
42081 MSRP $690

D BARRY DIXON COLLECTION
CANTON PENDANT
1 Light/Etched Glass/Antique Brass
H: 20" x 10" Dia
H: 51 x 25 Dia cm
Max Watts: 40
*shown with Edison bulb
*additional chain CHN-991
DD42055 MSRP $900

E **SAVOY PENDANT**
1 Light/Polished Brass/Copper Plated Interior
H: 12" x 9.5" Dia
H: 30 x 24 Dia cm
Max Watts: 40
*taupe cloth cord
46603 MSRP $570

F WINDSOR SMITH COLLECTION
SELENE PENDANT
1 Light/Clear Glass/Etched Glass/Polished Nickel
Adj H: 22" - 52" x 10" Dia
Adj H: 56 - 132 x 25 Dia cm
Max Watts: 60
*additional pipe PIPE-100
*shown with silver bowl globe
DS49017 MSRP $750

G **SABINE PENDANT**
1 Light/Polished Nickel/Clear Glass
Adj H: 28.5" - 52.5" x 9" Dia
Adj H: 72 - 133 x 23 Dia cm
Max Watts: 60
*shown with radio bulb
*additional pipe PIPE-133
49003 MSRP $900

H **CARLETTO PENDANT**
1 Light/Polished Nickel/Polished Brass
Adj. H: 21.5" - 51.5" x 14" Dia
Adj. H: 55 x 131 Dia cm
Max Watts: 60
*additional pipe PIPE-138
46508 MSRP $1,110

I **ORMOND PENDANT**
1 Light/Vintage Silver
Adj. H: 23" - 43.5" x 10" Dia
Adj. H: 58 - 110 x 25 Dia cm
Max Watts: 40
*additional pipe PIPE-122
42011 MSRP $750

F

G

*detail shown DS49017

H

I

A **SHELTON GLOBULAR PENDANT**
1 Light/Seedy Glass/Brushed Nickel
H: 10.5" x 7" Dia
H: 27 x 18 Dia cm
Max Watts: 40
*shown with medium antique tubular bulb
*taupe cloth cord
*glass will vary in shape & size
46645 MSRP $510

B **SHELTON CYLINDER PENDANT**
1 Light/Seedy Glass/Brushed Nickel
H: 13.5" x 7" Dia
H: 34 x 18 Dia cm
Max Watts: 40
*shown with medium antique tubular bulb
*taupe cloth cord
*glass will vary in shape & size
46646 MSRP $630

C **JAVIER PENDANT**
1 Light/Smoke Ombre Glass
H: 13" x 8" Dia
H: 33 x 20 Dia cm
Max Watts: 25
*shown with Edison bulb
*taupe cloth cord
47438 MSRP $510

D **CARLTON PENDANT**
1 Light/Clear Glass/Polished Nickel
H: 9.5" x 11" Dia
H: 24 x 28 Dia cm
Max Watts: 40
*shown with Edison bulb
44330 MSRP $345

E **REEVES SMALL PENDANT**
1 Light/Clear Glass/Polished Nickel
H: 10" x 7" Dia
H: 25 x 18 Dia cm
Max Watts: 40
*shown with radio bulb
49911 MSRP $540

F **REEVES LARGE PENDANT**
1 Light/Clear Glass/Polished Nickel
H: 20.5" x 15" Dia
H: 52 x 38 Dia cm
Max Watts: 60
*shown with Edison bulb
*additional chain CHN-931
49912 MSRP $1,230

G LAURA KIRAR COLLECTION
CAVIAR ADJUSTABLE SMALL PENDANT
1 Light/Brown Nickel/Smoke Glass
Adj. H: 11" - 29" x 6" Dia
Adj. H: 28 - 74 x 15 Dia cm
Max Watts: 25
*additional pipe PIPE-103
DK49910 MSRP $420

H LAURA KIRAR COLLECTION
CAVIAR ADJUSTABLE MEDIUM PENDANT
1 Light/Brown Nickel/Smoke Glass
Adj. H: 21" - 39" x 10" Dia
Adj. H: 53 - 99 x 25 Dia cm
Max Watts: 40
*additional pipe PIPE-103
DK49912 MSRP $570

I LAURA KIRAR COLLECTION
CAVIAR ADJUSTABLE LARGE PENDANT
1 Light/Brown Nickel/Smoke Glass
Adj. H: 23" - 35" x 14" Dia
Adj. H: 58 - 89 x 36 Dia cm
Max Watts: 60
*additional pipe PIPE-103
DK49914 MSRP $870

J LAURA KIRAR COLLECTION
CAVIAR ADJUSTABLE SMALL PENDANT
1 Light/Polished Nickel/Clear Glass
Adj. H: 11" - 29" x 6" Dia
Adj. H: 28 - 74 x 15 Dia cm
Max Watts: 25
*packed with (3) 6" rods
*additional pipe PIPE-100
DK49909 MSRP $420

K LAURA KIRAR COLLECTION
CAVIAR ADJUSTABLE MEDIUM PENDANT
1 Light/Polished Nickel/Clear Glass
Adj. H: 21" - 39" x 10" Dia
Adj. H: 53 - 99 x 25 Dia cm
Max Watts: 40
*additional pipe PIPE-100
DK49911 MSRP $570

L LAURA KIRAR COLLECTION
CAVIAR ADJUSTABLE LARGE PENDANT
1 Light/Polished Nickel/Clear Glass
Adj. H: 23" - 35" x 14" Dia
Adj. H: 58 - 89 x 36 Dia cm
Max Watts: 60
*additional pipe PIPE-100
DK49913 MSRP $870

A

B

A **HANLEY FLUSH MOUNT**
4 Light/Fluted Triangular Glass Rods/
Antique Brass
H: 17" x 30" Dia
H: 43 x 76 Dia cm
Max Watts (per socket): 40
*shown with small clear tubular bulbs
49010 MSRP $1,410

B **HANLEY FLUSH MOUNT**
4 Light/Fluted Triangular Glass/
Polished Nickel
H: 17" x 30" Dia
H: 43 x 76 Dia cm
Max Watts (per socket): 40
*shown with silver bowl globe bulbs
49009 MSRP $1,410

C WINDSOR SMITH COLLECTION
MINERVA CEILING LIGHT
1 Light/Vintage Silver/Opal Glass
H: 12.5" x 6" Dia
H: 32 x 15 Dia cm
Max Watts: 40
DS49022 MSRP $1,050

D WINDSOR SMITH COLLECTION
MINERVA CEILING LIGHT
1 Light/Antique Brass/Opal Glass
H: 12.5" x 6" Dia
H: 32 x 15 Dia cm
Max Watts: 40
DS49021 MSRP $1,050

C

D

A

A **ELRICK FLUSH MOUNT**
8 Light/Polished Nickel
H: 4" x 20" Sq
H: 10 x 51 cm Sq
Max Watts (per socket): 40
*shown with radio bulb
82100 MSRP $1,350

B

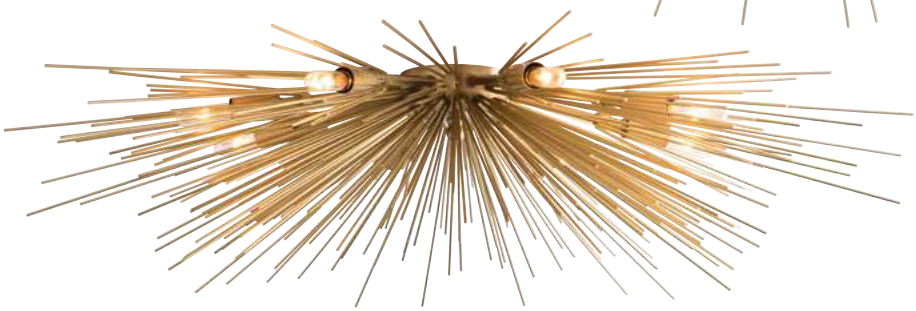

ALTERNATE VIEW

B **ROXANNE FLUSH MOUNT**
8 Light/Antique Brass
H: 8" x 35" Dia
H: 20 x 89 Dia cm
Max Watts (per socket): 40
*shown frosted globe bulbs
89969 MSRP $2,250

C

C **ROXANNE FLUSH MOUNT**
8 Light/Polished Nickel
H: 8" x 35" Dia
H: 20 x 89 Dia cm
Max Watts (per socket): 40
*shown small clear tubular bulbs
89970 MSRP $2,250

A

A **NORTON SCONCE**
1 Light/Antique Brass/Fluted Triangular Glass
H: 15.5" x W: 11" x D: 5"
H: 39 x W: 28 x D: 13 cm
Max Watts: 60
49956 MSRP $750

B

B **ROYALTON SCONCE**
2 Light/Vintage Brass/Clear Glass
H: 15.5" x W: 8.5" x D: 6.5"
H: 39 x W: 22 x D: 17 cm
Max Watts (per socket): 25
49957 MSRP $1,200

C

C **JITEN SCONCE/CEILING MOUNT**
8 Light/Antique Brass
20" Dia x D: 4"
51 Dia x D: 10 cm
Max Watts (per socket): 25
*shown with small clear tubular bulbs
49982 MSRP $1,110

D

D **ZANADOO SCONCE/ CEILING MOUNT**
5 Light/Polished Nickel
H: 12" x W: 18" x D: 8"
H: 30 x W: 46 x D: 20 cm
Max Watts (per socket): 25
*shown with silver bowl globe bulbs
49997 MSRP $1,200

E

E **ZANADOO SCONCE/ CEILING MOUNT**
5 Light/Antique Brass
H: 12" x W: 18" x D: 8"
H: 30 x W: 46 x D: 20 cm
Max Watts (per socket): 25
*shown with frosted globe bulbs
49996 MSRP $1,200

A

B

A **YALE LARGE SCONCE**
1 Light/Antique Nickel/Antiqued Mirror
H: 45" x W: 9.5" x D: 6"
H: 114 x W: 24 x D: 15 cm
Max Watts: 40
*finish may vary
46692 MSRP $1,050

B **YALE SMALL SCONCE**
1 Light/Antique Nickel/Antiqued Mirror
H: 24" x W: 9.5" x D: 6"
H: 61 x W: 24 x D: 15 cm
Max Watts: 40
*shown with small clear tubular bulb
*finish may vary
46691 MSRP $960

C

D

E

C **YALE SMALL SCONCE**
1 Light/Vintage Brass/Antiqued Mirror
H: 24″ x W: 9.5″ x D: 6″
H: 61 x W: 24 x D: 15 cm
Max Watts: 40
*finish may vary
44323 MSRP $960

D **YALE LARGE SCONCE**
1 Light/Vintage Brass/Antiqued Mirror
H: 45″ x W: 9.5″ x D: 6″
H: 114 x W: 24 x D: 15 cm
Max Watts: 40
*finish may vary
44324 MSRP $1,050

E BARRY DIXON COLLECTION
ARAMIS SCONCE
1 Light/Antique Brass/Clear Glass
H: 37″ x W: 9″ x D: 7″
H: 94 x W: 23 x D: 18 cm
Max Watts: 40
*shown with small clear tubular bulb
DD42614 MSRP $1,350

A

B

C

D

E

A **ELLIOT SCONCE**
1 Light/Polished Brass
12″ Dia x D: 4″
30 Dia x D: 10 cm
Max Watts: 25
*shown with silver bowl globe bulb
42078 MSRP $540

B **FRANKEL SCONCE**
2 Light/Antique Brass/Antique Silver
H: 19″ x W: 4.5″ x D: 4″
H: 48 x W: 11 x D: 10 cm
Max Watts (per socket): 40
*shown with Edison bulb
42079 MSRP $510

C **DELORES SCONCE**
2 Light/Matte Brass/Polished Brass
H: 11″ x W: 7.5″ x D: 5″
H: 28 x W: 19 x D: 13 cm
Max Watts (per socket): 40
42082 MSRP $600

D **LORITA SCONCE**
1 Light/Polished Brass
H: 15″ x W: 12″ x D: 7″
H: 38 x W: 30 x D: 18 cm
Max Watts: 40
*shown with Nostalgic thread bulb
42046 MSRP $480

E **MAVIS SCONCE/CEILING MOUNT**
5 Light/Vintage Silver/Seedy Glass/Swivel Sockets
H: 25″ x W: 28.5″ x D: 11.5″
H: 64 x W: 72 x D: 29 cm
Max Watts (per socket): 25
49008 MSRP $1,200

F **LORITA SCONCE**
1 Light/Polished Nickel
H: 15″ x W: 12″ x D: 7″
H: 38 x W: 30 x D: 18 cm
Max Watts: 40
*shown with a Nostalgic thread bulb
46811 MSRP $480

F

A

B

C

A **MILLENIUM SCONCE, RIGHT**
2 Light/Champagne Leaf/Opal Glass
H: 23" x W: 15" x D: 10"
H: 58 x W: 38 x D: 25 cm
Max Watts (per socket): 25
*finish may vary
49032 MSRP $750

B **MILLENIUM SCONCE, LEFT**
2 Light/Champagne Leaf/Opal Glass
H: 23" x W: 15" x D: 10"
H: 58 x W: 38 x D: 25 cm
Max Watts (per socket): 25
*finish may vary
49031 MSRP $750

C **QUIMBY SCONCE**
1 Light/Antique Brass/White Glass
H: 10" x W: 5.5" x D: 8"
H: 25 x W: 14 x D: 20 cm
Max Watts: 40
49963 MSRP $300

D

E

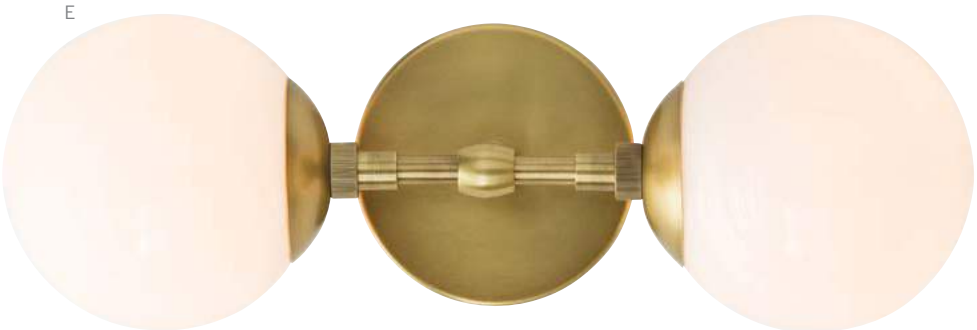

F

D **POLARIS SCONCE**
2 Light/Brown Nickel/Smoke Glass
H: 17" x W: 5.5" x D: 6"
H: 43 x W: 14 x D: 15 cm
Max Watts (per socket): 40
*shown with small clear tubular bulbs
49962 MSRP $450

E **POLARIS SCONCE**
2 Light/Antique Brass/Frosted Glass
H: 17" x W: 5.5" x D: 6"
H: 43 x W: 14 x D: 15 cm
Max Watts (per socket): 40
49961 MSRP $450

F **DUNCAN SCONCE**
1 Light/Brown Nickel/Smoke Glass
H: 35" x D: 12" x 10" Dia
H: 89 x D: 30 x 25 Dia cm
Max Watts: 60
*shown with radio bulb
*black cloth cord
49036 MSRP $540

A

B

C

A **STILLMAN SCONCE**
2 Light/Vintage Brass/Frosted Glass/Plain Mirror
H: 19.5" x W: 7" x D: 5"
H: 50 x W: 18 x D: 13 cm
Max Watts (per socket): 25
42301 MSRP $1,110

B LAURA KIRAR COLLECTION
DOVE SCONCE
1 Light/Antique Brass/Frosted Glass/Clear Glass
H: 11" x W: 14" x D: 6.5"
H: 28 x W: 36 x D: 17 cm
Max Watts: 60
DK49957 MSRP $675

C **JALEN SCONCE**
3 Light/Antique Brass/Frosted Glass
15" Tri x D: 5.5"
38 Tri x D: 14 cm
Max Watts (per socket): 40
49018 MSRP $660

D

E

D **STEFAN SCONCE**
1 Light/Frosted Glass/Antique Brass/Bronze
H: 12" x W: 5.5" x D: 7"
H: 51 x W: 13 x D: 18 cm
Max Watts: 25
49999 MSRP $540

E **STEFAN SCONCE**
1 Light/Frosted Glass/Vintage Silver/Bronze
H: 12" x W: 5.5" x D: 7"
H: 51 x W: 13 x D: 18 cm
Max Watts: 25
49006 MSRP $540

A

A **HIVE SCONCE**
1 Light/Antique Brass
H: 6" x W: 9.5" x D: 11"
H: 15 x W: 24 x D: 28 cm
Max Watts: 60
49702 MSRP $1,200

B

B **FABLE SCONCE**
2 Light/Vintage Brass
H: 12" x W: 8.5" x D: 4"
H: 30 x W: 22 x D: 10 cm
Max Watts (per socket): 40
44011 MSRP $1,410

C

D

E

C **ALISA SCONCE**
1 Light/Matte Brass
H: 11.5" x W: 10" x D: 4"
H: 29 x W: 25 x D: 10 cm
Max Watts: 25
46501 MSRP $300

D **ARNOLD SCONCE**
2 Light/Natural Iron/Brass Welds
H: 9" x W: 7" x D: 4"
H: 23 x W: 18 x D: 10 cm
Max Watts (per socket): 40
*finish may vary
46604 MSRP $300

E **BRYCE SCONCE**
2 Light/Vintage Brass
H: 12" x W: 7.5" x D: 4"
H: 30 x W: 19 x D: 10 cm
Max Watts (per socket): 40
48610 MSRP $360

A

B

C

D

E

A **TRINIDAD SCONCE**
1 Light/Waxed Iron
H: 22″ x W: 13.5″ x D: 4″
H: 56 x W: 34 x D: 10 cm
Max Watts: 25
44325 MSRP $690

B **DEMI SCONCE**
1 Light/Vintage Brass
H: 20″ x W: 8″ x D: 1.5″
H: 51 x W: 20 x D: 4 cm
Max Watts: 40
*shown with medium antique tubular bulb
42083 MSRP $750

C **SAHARA SCONCE**
1 Light/Antique Brass/Antique Bronze
H: 20″ x W: 9.5″ x D: 5″
H: 51 x W: 24 x D: 13 cm
Max Watts: 25
*shown with swirl bulb
46651 MSRP $300

D **DIESEL SCONCE**
6 Light/Vintage Brass/Natural Iron
H: 32″ x W: 9″ x D: 4″
H: 81 x W: 23 x D: 10 cm
Max Watts (per socket): 25
42080 MSRP $900

E WINDSOR SMITH COLLECTION
HUTU WALL LIGHT
2 Light/Bronze
H: 41.5″ x W: 4.5″ x D: 6″
H: 105 x W: 11 x D: 15 cm
Max Watts (per socket): 60
*shown with nostalgic loop bulb
DS44006 MSRP $1,050

A

B

A **PRESCOTT SCONCE**
2 Light/Champagne Leafed Iron/
Antiqued Mirror
H: 12" x W: 7.5" x D: 4"
H: 30 x W: 19 x D: 10 cm
Max Watts (per socket): 25
*finish may vary
44320 MSRP $420

B **PRESCOTT LARGE SCONCE**
2 Light/Gold Leafed Iron/Antiqued Mirror
H: 16.5" x W: 14" x D: 6"
H: 42 x W: 36 x D: 15 cm
Max Watts (per socket): 40
*finish may vary
44322 MSRP $750

C

ALTERNATE VIEW

D

C WINDSOR SMITH COLLECTION
CASSANDRA SCONCE
1 Light/Polished Nickel/
Blue Socket Sleeve Cover
H: 15" x W: 8" x D: 4.5"
H: 38 x W: 20 x D: 11 cm
Max Watts: 60
*shown with clear bent tip candelabra bulb
DS44004 MSRP $705

D **ELLORY SCONCE**
1 Light/Antique Brass/Bronze/Antique Mirror
H: 13.5" x W: 7" x D: 4"
H: 34 x W: 18 x D: 10 cm
Max Watts: 25
*finish may vary
44015 MSRP $900

A

B

C

A **SABINE SCONCE**
1 Light/Clear Glass/Polished Nickel
H: 15" x W: 6" x D: 8"
H: 38 x W: 15 x D: 20 cm
Max Watts: 25
*shown with small clear tubular bulb
49984 MSRP $480

B WINDSOR SMITH COLLECTION
ATLAS SCONCE
1 Light/Vintage Silver/Seedy Glass
H: 16" x W: 8" x D: 9.5"
H: 41 x W: 20 x D: 24 cm
Max Watts: 40
*shown with large antique tublular bulb
DS49005 MSRP $675

C WINDSOR SMITH COLLECTION
MERCURY SCONCE
1 Light/Vintage Silver
H: 8" x W: 8.5" x Adj D: 3" - 4.5"
H: 20 x W: 22 x Adj. D: 8 - 19 cm
Max Watts: 40
DS49012 MSRP $525

D

E

D WINDSOR SMITH COLLECTION
ATHENA SCONCE
1 Light/Antique Brass/Clear Crystal
H: 18.5" x W: 7" x D: 9"
H: 47 x W: 18 x D: 23 cm
Max Watts: 35
DS49006 MSRP $675

E **SABINE SCONCE**
1 Light/Clear Glass/Antique Brass
H: 15" x W: 6" x D: 8"
H: 38 x W: 15 x D: 20 cm
Max Watts: 25
*shown with small clear tubular bulb
49986 MSRP $480

F WINDSOR SMITH COLLECTION
MERCURY SCONCE
Antique Brass
H: 8" x W: 8.5" x Adj D: 3" - 4.5"
H: 20 x W: 22 x Adj. D: 8 - 19 cm
Max Watts: 40
DS49002 MSRP $525

F

A

A **DUANE SCONCE**
4 Light/Antique Brass/Bronze/Frosted Glass
H: 25" x W: 22" x D: 10"
H: 66 x W: 56 x D: 25 cm
Max Watts (per socket): 40
49035 MSRP $1,050

B

B **FRANZ SCONCE**
1 Light/Matte Brass
Off-White Linen Shade
H: 21" x W: 9" x D: 10"
H: 53 x W: 23 x D: 25 cm
Max Watts: 60
49701-362 MSRP $900

C

C **YASMIN SCONCE**
2 Light/Bronze/Antique Brass
Off-White Linen Pivot Shade
H: 18" x W: 11" x Adj. D: 15.5" - 22.5"
H: 46 x W: 28 x Adj. D: 39 - 57 cm
Max Watts (per socket): 60
49995 MSRP $780

D

D BARRY DIXON COLLECTION
DIANA SCONCES SET OF 2
1 Light/Natural Horn/Embossed Antique Brass
Ivory Microfiber Shade
H: 15.5" x W: 6" x D: 7.5"
H: 39 x W: 15 x D: 19 cm
Max Watts: 25
*size of horns and finish may vary
DD42031-696 MSRP $900

A

B

*49985 SHOWN AS A WALL SCONCE

A **PARRISH SCONCE**
1 Light/Clear Glass/English Bronze
H: 15″ x W: 8″ x D: 14″
H: 38 x W: 20 x D: 36 cm
Max Watts: 40
*shown with an Edison bulb
49953 MSRP $540

B **FLYNN SCONCE**
1 Light/Weathered Oak Wood
Aged Iron Shade/Acrylic Bottom Diffuser
H: 17″ x W: 5″ x D: 15″
H: 43 x W: 13 x D: 38 cm
Max Watts: 40 Line Switch
*not hardwired
49985 MSRP $570

C **PRUITT SCONCE**
1 Light/Light Bronze/Pivot Shade/Antique Brass
H: 10″ x W: 4″ x Adj. D: 8.5″ - 11″
H: 25 x W: 10 x Adj. D: 22 - 28 cm
Max Watts: 40
49993 MSRP $420

D **MADELINE SCONCE**
1 Light/Seedy Glass/Natural Iron/Brass Welds
H: 15″ x W: 7″ x D: 8″
H: 38 x W: 18 x D: 20 cm
Max Watts: 40
*shown with Nostalgic spiral radio bulb
42024 MSRP $495

C

D

A

A **GILBERT SCONCE**
1 Light/Bronze
Textured Linen Half-Shade
H: 27" x W: 14.5" x D: 7.5"
H: 69 x W: 36 x D: 19 cm
Max Watts: 60
49991 MSRP $960

B

B **GILBERT SCONCE**
1 Light/Gold Leafed Iron
Black Microfiber Half-Shade
H: 27" x W: 14.5" x D: 7.5"
H: 69 x W: 37 x D: 19 cm
Max Watts: 60
*finish may vary
49992 MSRP $960

C

D

C WINDSOR SMITH COLLECTION
ADONIA SCONCE
1 Light/Black Resin/Vintage Silver
Black Microfiber Half-Shade
H: 34" x W: 14" x D: 7.5"
H: 86 x W: 36 x D: 19 cm
Max Watts: 60
DS49009 MSRP $900

D WINDSOR SMITH COLLECTION
ADONIA SCONCE
1 Light/White Resin/Vintage Silver
Light Gray Microfiber Half-Shade
H: 34" x W: 14" x D: 7.5"
H: 86 x W: 36 x D: 19 cm
Max Watts: 60
DS49008 MSRP $900

A WINDSOR SMITH COLLECTION
LOKI WALL LAMP
1 Light/Antique Brass/Matte White
Adj H: 19"- 24" x Adj W: 4" - 33" x Adj D: 15.5"- 32"
Adj H: 48 - 61 x Adj W: 10 - 84 x Adj D: 39 - 81 cm
Max Watts: 25
DS49015 MSRP $675

B WINDSOR SMITH COLLECTION
LOKI WALL LAMP
1 Light/Antique Brass/Bronze
Adj H: 19"- 24" x Adj W: 4" - 33" x Adj D: 15.5"- 32"
Adj H: 48 - 61 x Adj W: 10 - 84 x Adj D: 39 - 81 cm
Max Watts: 25
DS49014 MSRP $675

C

C WINDSOR SMITH COLLECTION
PADMA LAMP
1 Light/Antique Brass/Rattan Shade
Adj H: 19"- 28.5" x W: 12" x Adj D: 15.5"- 32"
Adj H: 48 - 29 x W: 30 x Adj D: 39 - 81 cm
Max Watts: 40
*shown with 5" frosted globe bulb
DS49016 MSRP $675

D **WATSON SCONCE**
1 Light/Antique Brass/Bronze
H: 10" x W: 8.5" x Adj D: 14.5" - 20"
H: 25 x W: 22 x Adj D: 37 - 51 cm
Max Watts: 60
49020 MSRP $570

D

90

PERCENT IN-STOCK

Ships within 72 hours

FURNITURE

In keeping with our artisan roots and appreciation for the handmade, all of our furniture is eclectic, unique and well editd, featuring a variety of styles, finishes and sizes. Our tables range from diminutive drinks tables to dining tables for eight. Seating options vary from ottomans and benches to leather chairs and barstools. These sophisticated designs work perfectly in a wide range of environments and are the type of products that your clients will move from house to house.

The addition of upholstered accent seating was a natural extension to our assortment, complementing and completing our lifestyle brand. These refined designs represent a curated range of classic polished looks with a modern sensibility appropriate for smaller urban spaces or as the perfect accent seating item to layer into more spacious rooms. To view all of your buying options, visit Arteriorshome.com/shop/furniture/upholstery

A

A WINDSOR SMITH COLLECTION
DOLMA COCKTAIL TABLE
Gold Leafed Aluminum/Clear Glass
H: 17" x 48" Dia
H: 43 x 121 Dia cm
*finish may vary
*also available as base only DS2011
DS2011-48 MSRP $7,500

B

B WINDSOR SMITH COLLECTION
DOLMA DINING TABLE
Gold Leafed Aluminum/Clear Glass
H: 30" x 72" Dia
H: 76 x 183 Dia cm
*finish may vary
*also available as entry table with 60" and 66" glass or as base only DS2012
DS2012-72 MSRP $13,500

C

C **BRAMPTON COCKTAIL TABLE**
Gold Leafed Aluminum/Clear Glass
H: 16" x 40" Dia
H: 41 x 102 Dia cm
*finish may vary
2361 MSRP $2,700

D

D **BRAMPTON DINING TABLE**
Gold Leafed Aluminum/Clear Glass
H: 30" x 60" Dia
H: 76 x 152 Dia cm
*finish may vary
*also available with 48",54", and 66" glass
2430-60 MSRP $6,300

A

A **HALTON DINING TABLE**
Espresso Wood/Antique Brass Clad
H: 30" x 60" Dia
H: 76 x 152 Dia cm
*clad may vary
2548 MSRP $3,900

B

B **DRACO DINING TABLE**
Antique Brass Clad/Natural Iron/Antique Brass
H: 30" x 60" Dia
H: 76 x 152 Dia cm
*clad may vary
4050 MSRP $6,000

C

C **HALTON ENTRY TABLE**
Natural Waxed Wood/Galvanized Iron Clad
H: 30" x 42" Dia
H: 76 x 107 Dia cm
*clad may vary
6417 MSRP $2,175

D

D **HALTON DINING TABLE**
Natural Waxed Wood/Galvanized Iron Clad
H: 30" x 60" Dia
H: 76 x 152 Dia cm
*clad may vary
2415 MSRP $3,000

A

A **RAWLINS DINING TABLE**
Natural Iron/Clear Glass
H: 30" x 66" Dia
H: 76 x 168 Dia cm
*also available with 48",54", and 60" glass
2098-66 MSRP $6,000

B

B **SALVADOR ENTRY TABLE**
Natural Iron/Clear Glass
H: 30" x 48" Dia
H: 76 x 122 Dia cm
*also available with 54" and 60" glass
2054-48 MSRP $3,900

C

C **NAOMI DINING TABLE**
Antique Bronze Aluminum/Clear Glass
H: 30" x 60" Dia
H: 76 x 152 Dia cm
*also available with 48" and 54" glass
4051-60 MSRP $6,000

D

D **THATCHER DINING TABLE**
Natural Iron/ Clear Glass
H: 30" x 66" Dia
H: 76 x 168 Dia cm
*also available with 48", 54", and 60" glass
2010-66 MSRP $6,900

A

A **HUXLEY DINING TABLE**
Washed Gray Wood/Antique Silver Iron Clad
H: 30" x 47.5" Dia
H: 76 x 121 Dia cm
*clad may vary
2486 MSRP $4,800

B

B **NOVA ENTRY TABLE**
Brushed Nickel/Beveled Glass
H: 29.5" x 47" Dia
H: 75 x 119 Dia cm
6556 MSRP $3,300

C

C **URSULA ENTRY TABLE**
Natural Iron/ Clear Glass
H: 30" x 48" Dia
H: 76 x 122 Dia cm
*also available with 54", 60", and 66" glass
3195-48 MSRP $5,700

D

D BARRY DIXON COLLECTION
XYLO TABLE
Natural Iron/Polished Brass/Clear Glass
H: 30" x 48" Dia
H: 76 x 122 Dia cm
DD2071 MSRP $3,750

A

B

C

A **EMILIA COCKTAIL TABLE**
Gold Leafed Iron/Clear Glass/Plain Mirror
H: 14.5" x W: 43" x D: 20"
H: 37 x W: 109 x W: 51 cm
*finish may vary
2724 MSRP $1,500

B **WINCHESTER SIDE TABLE**
Gold Leafed Iron/Clear Glass
H: 24.5" x 24" Dia
H: 62 x 61 Dia cm
*finish may vary
6754 MSRP $1,095

C **WINCHESTER COCKTAIL TABLE**
Gold Leafed Iron/Clear Glass
H: 16" x 36" Dia
H: 40 x 91 Dia cm
*finish may vary
4013 MSRP $1,800

D **BARLOW COCKTAIL TABLE**
Gold Leafed Iron/Plain Mirror/Clear Glass
H: 14.5" x 36" Sq
H: 37 x 91 cm Sq
*finish may vary
2687 MSRP $2,400

D

E

E **ELBA COCKTAIL TABLE**
Gold Leafed Iron/Clear Glass
H: 18" x W: 42" x D: 31.5"
H: 46 x W: 107 x D: 80 cm
*finish may vary
6181 MSRP $2,250

A

A **ORLEANS COCKTAIL TABLE**
Black Iron/Gold Leafed Iron/Rough Hewn
Black Marble
H: 17" x 36" Dia
H: 43 x 91 Dia cm
*marble and finish may vary
4083 MSRP $2,700

B **ORLEANS SIDE TABLE**
Black Iron/Gold Leafed Iron/Rough Hewn
Black Marble
H: 24" x 23.5" Dia
H: 61 x 60 Dia cm
*marble and finish may vary
6557 MSRP $1,380

C **BONNIE SIDE TABLE**
Gold Leafed Iron/Chiseled White Marble
H: 25.5" x 24" Dia
H: 65 x 61 Dia cm
*marble and finish may vary
4806 MSRP $1,500

B

C

D

D **TRIPP COCKTAIL TABLE**
Antique Brass Clad/Antique Bronze Iron
H: 16.5" x 38.5" Dia
H: 42 x 98 Dia cm
*clad may vary
2501 MSRP $1,800

E **DRACO END TABLE**
Antique Brass Foil Clad/Natural Iron/Antique Brass
H: 26" x 28" Dia
H: 66 x 46 Dia cm
*clad may vary
6983 MSRP $1,800

F **DRACO ACCENT TABLE**
Natural Iron/Antique Brass/White Marble
H: 18.5" x 18" Dia
H: 47 x 46 Dia cm
*marble may vary
6982 MSRP $750

E

F

A

A BARRY DIXON COLLECTION
BRUTALIST COCKTAIL TABLE
Natural Iron/Smoke Glass/Antique Brass Clad Bronze/Vintage Silver Clad
H: 16" x 43.5" Dia
H: 41 x 110 Dia cm
*clad may vary
DD2069 MSRP $2,550

B BARRY DIXON COLLECTION
BRUTALIST ACCENT TABLE
Natural Iron/Smoke Glass/Antique Brass Clad Bronze/Vintage Silver Clad
H: 22" x 15" Dia
H: 56 x 38 Dia cm
*clad may vary
DD2068 MSRP $750

C **EMILIO ACCENT TABLE**
Antique Brass/Bronze Mirror
H: 24" x W: 24" x D: 14.5"
H: 61 x W: 61 x D: 37 cm
6167 MSRP $1,050

D **CHLOE ACCENT TABLE**
Vintage Brass/White Marble
H: 20" x 13" Dia
H: 51 x 33 Dia cm
*marble may vary
9009 MSRP $840

B

C

D

E

F

G

E **RONAN TABLE**
Vintage Brass
H: 21.5" x 16" Dia
H: 55 x 41 Dia cm
2026 MSRP $2,400

F **HAVEN ACCENT TABLE**
Burnt Brass
H: 20.5" x 14" Dia
H: 52 x 36 Dia cm
*finish may vary
4132 MSRP $570

G **ARIES TABLE**
Antique Brass/Black Marble
H: 26.5" x 28.5" Dia
H: 67 x 72 Dia cm
*marble may vary
3920 MSRP $2,820

A

A **SLOAN COCKTAIL TABLE**
Antique Brass Clad/Natural Iron
H: 16″ x W: 44″ x D: 17″
H: 41 x W: 112 x D: 43 cm
*clad may vary
2117 MSRP $1,800

B BARRY DIXON COLLECTION
TREFLE SIDE TABLE
Natural Iron/Antique Brass Clad
H: 26″ x 29.5″ Tri
H: 66 x 75 cm Tri
*clad may vary
DD2405 MSRP $1,800

C **DARYL SIDE TABLE**
Antique Brass Clad/Antique Bronze
H: 26″ x 24″ Dia
H: 66 x 61 Dia cm
*clad may vary
6155 MSRP $1,650

B

C

D

D **SLATER COCKTAIL TABLE**
Antique Brass Clad/Natural Iron
H: 16" x W: 42" x D: 24"
H: 41 x W: 107 x D: 61 cm
*clad may vary
2510 MSRP $1,800

E **LUZ ACCENT TABLE**
Antique Brass Clad/Rusted Natural Iron
H: 22.5" x 12" Dia
H: 57 x 30 Dia cm
*clad may vary
6336 MSRP $900

F **SETH SIDE TABLE**
Antique Bronze/Antique Brass
H: 23" x W: 28" x D: 17"
H: 58 x W: 71 x D: 43 cm
2602 MSRP $1,500

E

F

A

B

C

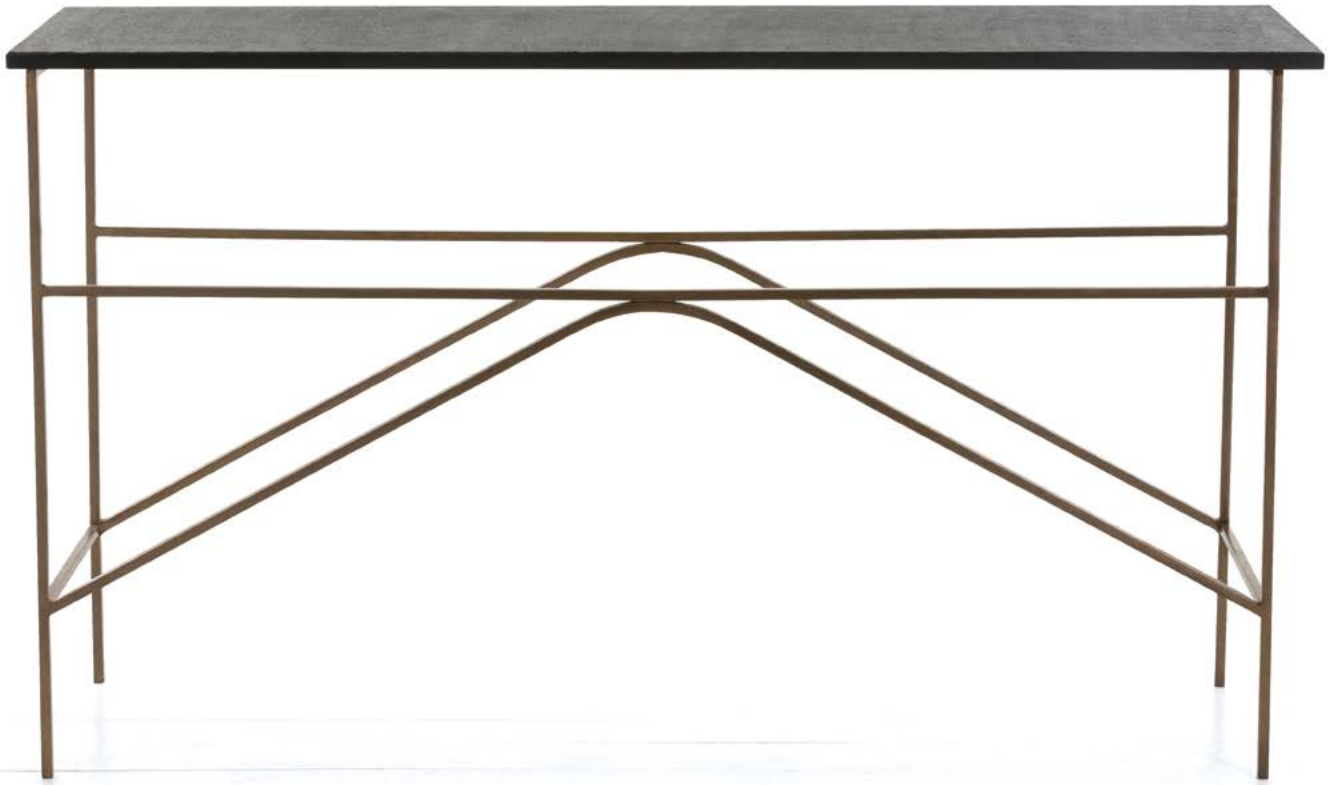

A **LIEV CONSOLE**
Antique Brass/Rough Hewn Black Marble
H: 33" x W: 42" x D: 18"
H: 84 x W: 107 x D: 46 cm
*marble may vary
6020 MSRP $1,590

B **LIEV SIDE TABLE**
Antique Brass/Rough Hewn Black Marble
H: 25.5" x 22" Sq
H: 65 x 56 Dia cm
*marble may vary
6021 MSRP $1,290

C **DEACAN CONSOLE**
Antique Brass/Black Granite
H: 31.5" x W: 54" x D: 15"
H: 80 x W: 137 x D: 38 cm
*granite may vary
2653 MSRP $2,700

D **ROURKE COCKTAIL TABLE**
Antique Brass/Clear Glass
H: 14" x 37" Dia
H: 36 x 94 Dia cm
2001 MSRP $1,950

D

A **ARNOT COCKTAIL TABLE**
Natural Iron
H: 17" x 38" Dia
H: 43 x 97 Dia cm
2525 MSRP $3,750

A

B

B **ARNOT CONSOLE**
Natural Iron
H: 32" x W: 58" x D: 18.5"
H: 81 x W: 147 x D: 47 cm
2527 MSRP $5,700

C

D

C BARRY DIXON COLLECTION
ANVIL SIDE TABLE
Burnt Waxed Wood/Dark Waxed Iron
H: 26.5" x 25" Dia
H: 67 x 64 Dia cm
*finish may vaary
DD2028 MSRP $3,450

D BARRY DIXON COLLECTION
ANVIL OCCASIONAL TABLE
Burnt Waxed Wood/Dark Waxed Iron
H: 24.5" x 18" Dia
H: 62 x 46 Dia cm
*finish may vary
DD2029 MSRP $2,220

E **ARNOT END TABLE**
Natural Iron
H: 28" x 24" Sq
H: 71 x 61 Sq cm
2526 MSRP $3,900

F BARRY DIXON COLLECTION
ANVIL ENTRY TABLE
Burnt Waxed Wood/Dark Waxed Iron
H: 30.5" x 35.5" Dia
H: 77 x 90 Dia cm
*finish may vary
DD2062 MSRP $5,100

E

F

A

B

C

A **CLINT COCKTAIL TABLE**
Antiqued Bronze
H: 16.5″ x 38″ Dia
H: 42 x 97 Dia cm
*finish may vary
4007 MSRP $2,040

B **CLINT SIDE TABLE**
Antiqued Bronze
H: 23″ x 21.5″ Dia
H: 58 x 55 Dia cm
*finish may vary
2034 MSRP $1,050

C **RICHLAND SIDE TABLE**
Distressed Natural Iron
H: 22″ x 19.5″ Sq
H: 56 x 50 cm Sq
*finish may vary
6747 MSRP $780

D

E

F

D **MALCOM COCKTAIL TABLE**
Dark Silver/Brass Welds
H: 16" x 35.5" Dia
H: 41 x 90 Dia cm
*finish may vary
6238 MSRP $1,230

E **DREA SIDE TABLE**
Natural Iron/Brass Welds
H: 23" x 26.5" Sq
H: 58 x 67 Sq cm
*finish may vary
6035 MSRP $1,200

F **MALCOM SIDE TABLE**
Dark Silver/Brass Welds
H: 22.5" x 20.5" Dia
H: 57 x 52 Dia cm
*finish may vary
6232 MSRP $690

A

A **BATES COCKTAIL TABLE**
Burnt Brass
H:14.5" x 38" Dia
H: 37 x 97 Dia cm
*finish may vary
2038 MSRP $2,040

B **LOWRY SIDE TABLE**
Antique Brass
H: 19" x W: 24" x D: 23"
H: 48 x W: 61 x D: 58 cm
*finish may vary
6034 MSRP $720

C **SANTIAGO SIDE TABLE**
Burnt Brass
H: 21.5" x 21" Dia
H: 55 x 53 Dia cm
*finish may vary
6655 MSRP $945

B

C

D

D **STANLEY COSTELLO COCKTAIL TABLE**
English Bronze
H: 18.5" x 36" Dia
H: 47 x 91 Dia cm
2420 MSRP $1,950

E **COSTELLO SIDE TABLE**
Natural Iron/Brass Welds
H: 25.5" x 21.5" Dia
H: 65 x 55 Dia cm
6777 MSRP $1,050

F **RUDD STOOL**
Bronze/Polished Brass
H: 18" x 14" Dia
H: 46 x 36 Dia cm
*finish may vary
6169 MSRP $1,350

E

F

A

A **OTHELLO COCKTAIL TABLE**
Antique Brass/Antiqued Mirror
H: 18.5" x W: 48" x D: 18"
H: 47 x W: 122 x D: 46 cm
*finish may vary
6531 MSRP $1,170

B **PERCY SIDE TABLE**
Zinc/Antiqued Mirror
H: 30" x 28" Dia
H: 76 x 71 Dia cm
*finish may vary
6682 MSRP $2,070

C **PERCY END TABLE**
Zinc/Antiqued Mirror
H: 24" x 18.5" Dia
H: 61 x 47 Dia cm
*finish may vary
2028 MSRP $1,590

B

C

D

D **PERCY COCKTAIL TABLE**
Antique Brass/Antiqued Mirror Bottom
Antiqued Mirror Border Top
H: 19" x W: 48" x D: 28"
H: 48 x W: 122 x D: 71 cm
*finish may vary
2603 MSRP $3,000

E **PERCY SIDE TABLE**
Antique Brass/Antiqued Mirror
H: 30" x 28" Dia
H: 76 x 71 Dia cm
*finish may vary
6553 MSRP $2,070

F **PERCY END TABLE**
Antique Brass/Antiqued Mirror
H: 24" x 18.5" Dia
H: 61 x 47 Dia cm
*finish may vary
2032 MSRP $1,590

E

F

A

A **TIPPIN COCKTAIL TABLE**
Antique Brass Clad/Natural Iron/Antique Brass
H: 18" x W: 48" x D: 24"
H: 46 x W: 122 x D: 61 cm
*clad may vary
2220 MSRP $2,700

B **TIPPIN END TABLE**
Antique Brass Clad/Natural Iron/Antique Brass
H: 24" x 18" Dia
H: 61 x 46 Dia cm
*clad may vary
2801 MSRP $1,050

C **TIPPIN SIDE TABLE**
Antique Brass Clad/Natural Iron/Antique Brass
H: 26" x W: 24" x D: 20"
H: 66 x W: 61 x D: 51 cm
*clad may vary
2120 MSRP $1,500

B

C

D

D **NIXON COFFEE TABLE**
Natural Iron/Antique Brass Clad
H: 18.5" x 38" Dia
H: 47 x 97 Dia cm
*clad may vary
6175 MSRP $2,520

E **TATUM SIDE TABLE**
Antique Silver Clad/Natural Iron
H: 18" x 18" Sq
H: 46 x 46 cm Sq
*clad may vary
2118 MSRP $900

E

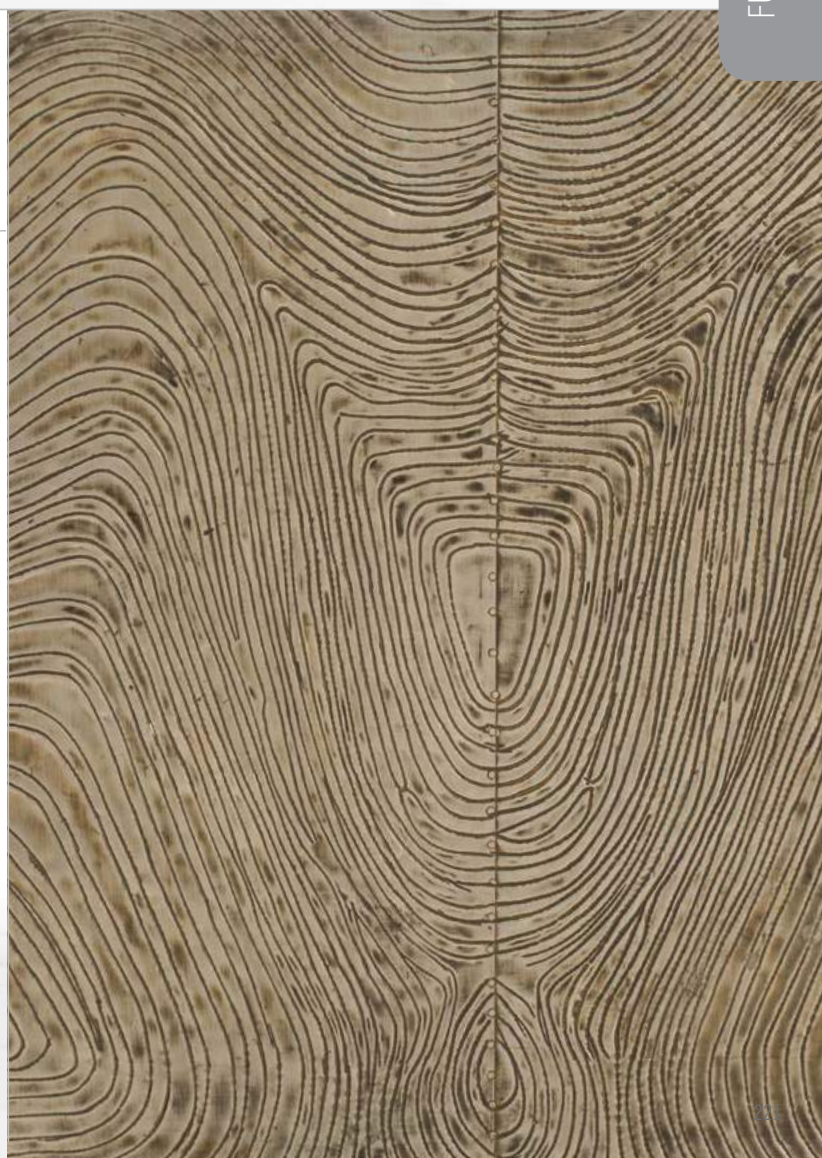

90% in stock, ships in 72 hours

A

B

C

A BARRY DIXON COLLECTION
EQUUS COCKTAIL TABLE
Chestnut Shagreen Embossed Leather/Bronze
H: 16" x W: 43" x D: 19"
H: 41 x W: 109 x D: 48 cm
*leather may vary
DD2035 MSRP $2,100

B BARRY DIXON COLLECTION
ZIPPE SIDE TABLE
Chestnut Shagreen Embossed Leather/Matte Black Iron
H: 26" x W: 16" x D: 12"
H: 66 x W: 41 x D: 30 cm
*leather may vary
DD2000 MSRP $2,400

C BARRY DIXON COLLECTION
EQUUS NESTING SIDE TABLES, SET OF 2
Chestnut Shagreen Embossed Leather/Bronze
H: 22" x W: 24" x D: 17"
H: 24" x W: 22" x D: 20"
H: 56 x W: 61 x D: 43 cm
H: 61 x W: 56 x D: 51 cm
*leather may vary
DD2022 MSRP $3,000

D

E

F

D **BARTON COFFEE TABLE**
Natural Iron/Clear Glass
H: 17" x W: 40" x D: 20"
H: 43 x W: 102 x D: 51 cm
2638 MSRP $2,100

E **HATTIE SIDE TABLE**
Blackened Iron/Antiqued Mirror
H: 25" x W: 16.5" x D: 12"
H: 64 x W: 42 x D: 30 cm
*finish may vary
4335 MSRP $780

F **HOGAN CONSOLE**
Natural Waxed Iron
H: 29" x W: 28" x D: 12 "
H: 74 x W: 71 x D: 30 cm
2401 MSRP $1,080

A

A WINDSOR SMITH COLLECTION
ISHANI COCKTAIL TABLES, SET OF 2
Natural Iron/Antiqued Mirror
H: 22" x W: 42" x D: 22"
H: 56 x W: 107 x D: 56 cm
*finish may vary
DS2013 MSRP $2,310

ALTERNATE CONFIGURATION

B **ALICE COFFE TABLES, SET OF 3**
Antique Brass/Clear Glass
H: 18" x W: 67" x D: 30"
H: 46 x W: 170 x D: 76 cm
6118 MSRP $2,100

B

C **AUSTIN COCKTAIL TABLES, SET OF 2**
Antique Brass Iron
H: 16" x W: 40" x D: 20"
H: 41 x W: 102 x D: 51 cm
4520 MSRP $1,950

ALTERNATE VIEW

C

FURNITURE

D **DAVIS COCKTAIL TABLE**
Antique Brass
H: 16" x W: 40" x W: 20"
H: 41 x W: 102 x D: 51 cm
2710 MSRP $900

D

A

A **SEQUOIA COCKTAIL TABLE**
Natural Iron
H: 16" x 38" Dia
H: 41 x 97 Dia cm
2447 MSRP $1,500

B

B **BORIS COCKTAIL TABLE**
Top Grain Black Leather/
Ebony Finished Wood/Antique Brass Ferrules
H: 16" x 43" Dia
H: 41 x 109 Dia cm
*leather may vary
6633 MSRP $3,000

C

C **ESSEX COCKTAIL TABLE**
Natural Iron/Blue Agate
H: 16" x 36" Dia
H: 41 x 91 Dia cm
*agate may vary
2689 MSRP $6,000

D

D **ESSEX COCKTAIL TABLE**
Gold Leafed Iron/Rose Quartz
H: 16" x 36" Dia
H: 41 x 91 Dia cm
*quartz and finish may vary
2734 MSRP $6,000

A

B

C

D

E

F

A **PIPPA STOOL**
Dark Walnut Wood/Natural Iron
H: 19" x 9.5" Dia
H: 48 x 25 Dia cm
*finish may vary
2036 MSRP $510

B **TOMSON STOOL**
Washed Gray Wood/Antique Silver Iron Clad
H: 19" x 12" Dia
H: 48 x 30 Dia cm
*clad may vary
2124 MSRP $1,050

C **JESUP STOOL**
Limed Wash Wood
H: 18" x 11.5" Dia
H: 46 x 29 Dia cm
*finish may vary
6310 MSRP $630

D **DARBY ACCENT TABLE**
Walnut Finished Wood
H: 25" x 18" Dia
H: 64 x 46 Dia cm
2589 MSRP $720

E **NANTUCKET SIDE TABLE**
Driftwood/Clear Glass
H: 24" x 26" Dia
H: 62 x 56 Dia cm
*finish and size may vary
5406 MSRP $990

F **JACOB COCKTAIL TABLE**
Washed Tobacco Wood
H: 12" x 35.5" Dia
H: 30 x 90 Dia cm
4303 MSRP $1,650

G **EMMETT COCKTAIL TABLE**
Washed Gray Wood
H: 15" x 32" Dia
H: 38 x 81 Dia cm
2485 MSRP $1,140

G

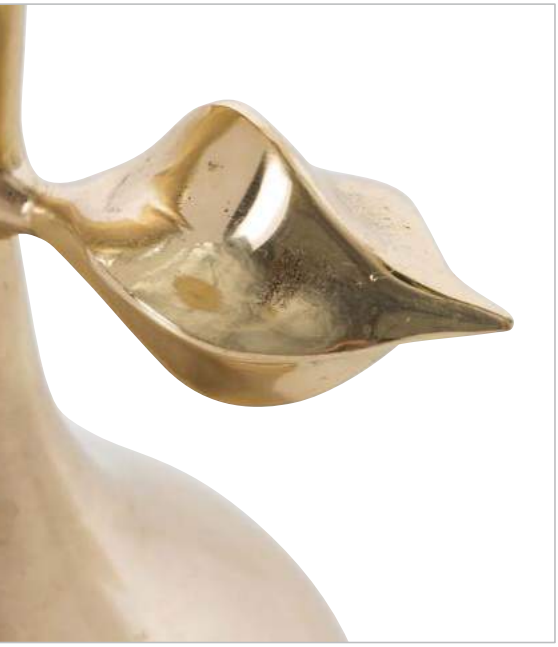

A **DELILAH ACCENT TABLE**
Matte Brass/Polished Brass/Black Glass
H: 20" x 9.5" Dia
H: 51 x 24 Dia cm
2592 MSRP $750

B **FULTON ACCENT TABLE**
Antique Brass/Stained Antique Mirror
H: 20.5" x 10" Dia
H: 52 x 25 Dia cm
*finish may vary
2612 MSRP $900

C **CELESTE ACCENT TABLE**
Vintage Brass/White Marble
Adj. H: 19" - 21" x 13" Dia
Adj H: 48 - 53 x 33 Dia cm
*marble may vary
9005 MSRP $840

D

E

F

D **CELESTE ACCENT TABLE**
Vintage Silver/Black Marble
Adj. H: 19" - 21" x 13" Dia
Adj H: 48 - 53 x 33 Dia cm
*marble may vary
9004 MSRP $840

E **FITZ ACCENT TABLE**
Antique Brass/Polished Brass/Blackened Iron
H: 22.5" x 10" Dia
H: 57 x 25 Dia cm
2654 MSRP $690

F JAY JEFFERS COLLECTION
FITZGERALD ACCENT TABLE
Matte Brass/Polished Brass/White Marble
H: 25.5" x W: 10.5" x D: 7.5"
H: 65 x W: 27 x D: 19 cm
*marble may vary
DJ2012 MSRP $1,800

A

B

A **BARNETT SIDE TABLE**
Distressed Aluminum
H: 20.5" x W: 18" x D: 12"
H: 52 x W: 46 x D: 30 cm
*pitting may vary
2031 MSRP $900

B **DRYDEN ACCENT TABLE**
Distressed Aluminum
H: 22.5" x 10" Dia
H: 57 x 25 Dia cm
*pitting may vary
6198 MSRP $540

C **BELLAMY RECTANGULAR SIDE TABLE**
Distressed Aluminum
H: 28" x W: 28" x D: 16"
H: 71 x W: 71 x D: 41 cm
*pitting may vary
2021 MSRP $1,200

D **BELLAMY ROUND SIDE TABLE**
Distressed Aluminum
H: 26.5" x 23.5" Dia
H: 67 x 60 Dia cm
*pitting may vary
4071 MSRP $1,410

C

D

E

F

E **COOPER ACCENT TABLE**
Silver Leafed Iron/Antiqued Mirror
H: 21.5" x 14.5" Dia
H: 55 x 37 Dia cm
*finish may vary
6343 MSRP $600

F **LOU ACCENT TABLE**
Blackened Iron
H: 21" x 18" Dia
H: 53 x 46 Dia cm
*finish may vary
6047 MSRP $900

G **FOREST PARK TABLE**
Distressed Silver Iron
H: 24" x 17" Dia
H: 61 x 43 Dia cm
3058 MSRP $975

H **PETRA SIDE TABLE**
Black Iron/White Marble
H: 28.5" x 21.5" Dia
H: 72 x 55 Dia cm
*marble may vary
6581 MSRP $990

G

H

A **ARTESA TABLE**
White Parsons Wood/Vintage Silver Brass Clad
H: 30" x 32" Dia
H: 76 x 81 Dia cm
*clad and finish may vary
2448 MSRP $1,800

B

C

D

B **FELIX STOOL**
Walnut Stained Wood/Antique Silver Clad
H: 17" x 15" Dia
H: 43 x 58 Dia cm
*clad may vary
2591 MSRP $600

C **FELIX STOOL**
Black Stained Wood/Antique Brass Clad
H: 17" x 15" Dia
H: 43 x 58 Dia cm
*clad may vary
2590 MSRP $600

D **OMAR ACCENT TABLE**
Natural Iron/Faux Horn
H: 24.5" x 14" Dia
H: 62 x 36 Dia cm
*finish may vary
6114 MSRP $750

E

E **EVERETT LARGE ENTRY TABLE**
Natural Waxed Wood/Oxidized Iron Clad
H: 30.5" x 32" Dia
H: 77 x 81 Dia cm
*clad and finish may vary
6705 MSRP $1,650

F

F **EVERETT TABLE**
Natural Waxed Wood/Oxidized Iron Clad
H: 25.5" x 24" Dia
H: 65 x 61 Dia cm
*clad and finish may vary
2644 MSRP $1,080

A

B

C

D

A **CAPELLI SIDE TABLE**
Natural Iron/Vintage Brass
H: 26.5" x 24" Dia
H: 67 x 60 Dia cm
2025 MSRP $1,740

B **DICKENS NESTING TABLES, SET OF 2**
Blackened Iron/Gold Leafed Iron/Antiqued Mirror
H: 20" x 20" Dia
H: 16" x 17.5"/12" Oval
H: 51 x 51 Dia cm
H: 41 x 44/30 cm Oval
*finish may vary
2660 MSRP $870

C **ENNIS SIDE TABLE**
Bronze/Clear Glass
H: 22" x 22.5" Dia
H: 56 x 57 Dia cm
6598 MSRP $1,260

D **RAMIRO END TABLE**
Black Waxed Hammered Iron
H: 24.5" x 24" Dia
H: 62 x 61 Dia cm
6632 MSRP $1,650

E **NEIL SIDE TABLE**
Slate Veneer/Polished Nickel
H: 20" x 26.5" Dia
H: 51 x 67 Dia cm
4228 MSRP $1,800

F **KEIFER SIDE TABLE**
Antique Silver Iron/Black Marble
H: 22.5" x 22" Dia
H: 57 x 56 Dia cm
*marble may vary
6527 MSRP $1,200

G **GENTRY SIDE TABLE**
Gray Limed Oak Veneer/Polished Nickel
H: 27.5" x 22" Dia
H: 70 x 56 Dia cm
*finish may vary
5322 MSRP $810

E

F

G

A

B

A **KNIGHT SMALL ACCENT TABLES SET OF 3**
Natural Waxed Iron/Black Marble/Oxidized Brass Clad/Clear Glass
H: 16.5" x W: 8" x D: 6"
H: 19.5" x W: 10" x D: 8.5"
H: 23" x W: 12" x D: 10"
H: 42 x W: 20 x D: 15 cm
H: 50 x W: 25 x D: 22 cm
H: 58 x W: 30 x D: 25 cm
*clad and marble may vary
2355 MSRP $900

B **KNIGHT LARGE NESTING TABLES SET OF 3**
Natural Waxed Iron/Black Marble/Oxidized Brass Clad/Clear Glass
H: 22.5" x W: 12" x D: 10.5"
H: 25.5" x W: 15" x D: 12"
H: 28.5 x W: 18" x W: 13"
H: 57 x W: 30 x D: 27 cm
H: 65 x W: 38 x D: 30 cm
H: 72 x W: 46 x D: 33 cm
*clad and marble may vary
6524 MSRP $1,380

C

D

E

F

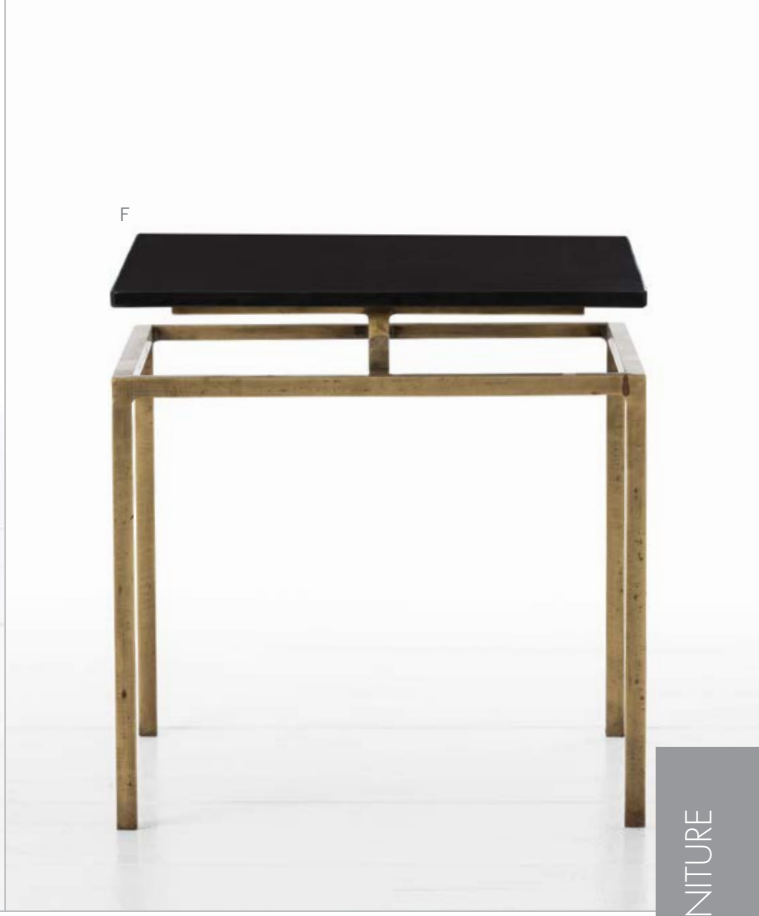

C **ELIAS NESTING TABLES, SET OF 2**
Antique Brass/Antiqued Mirror
H: 26″ x W: 28″ x D: 20″
H: 21.5″ x W: 22″ x D: 16″
H: 66 x W: 71 x D: 51 cm
H: 55 x W: 56 x D: 41 cm
*finish may vary
2681 MSRP $1,200

D **SINCLAIR SIDE TABLE**
Natural Waxed Iron/Oxidized Brass Clad/Clear Glass
H: 25″ x W: 20″ x D: 13″
H: 64 x W: 51 x D: 33 cm
*clad may vary
6650 MSRP $990

E **HOLLIS SIDE TABLE**
Antique Brass/Black Marble
H: 22″ x W: 26″ x D: 16″
H: 56 x W: 66 x D: 41 cm
*marble may vary
6683 MSRP $900

F **INDIGO SIDE TABLE**
Antique Brass/Black Marble
H: 18.5″ x 18″ Sq
H: 47 x 46 cm Sq
*marble may vary
6439 MSRP $900

G **HOLLIS SIDE TABLE**
Dark Natural Iron/White Marble
H: 22″ x W: 26″ x D: 16″
H: 56 x W: 66 x D: 41 cm
*marble may vary
6392 MSRP $900

H **INDIGO SIDE TABLE**
Dark Natural Iron/White Marble
H: 18.5″ x 18″ Sq
H: 47 x 46 cm Sq
*marble may vary
6163 MSRP $900

G

H

A

B

A **RUPERT BAR CART**
Antique Brass/Antiqued Mirror
H: 35" x W: 28" x D: 13"
H: 89 x W: 71 x D: 33 cm
*finish may vary
2091 MSRP $1,650

B **HATTIE ETAGERE**
Blackened Iron/Antiqued Mirror
H: 70" x 14" Sq
H: 178 x 36 cm Sq
*finish may vary
4333 MSRP $1,800

C **CONNAUGHT BAR CART**
Polished Nickel/Clear Glass
H: 36" x W: 30.5" x D: 19.5"
H: 91 x W: 77 x D: 50 cm
3077 MSRP $1,845

D **CONNAUGHT BAR CART**
Antique Brass/Clear Glass
H: 36" x W: 30.5" x D: 19.5"
H: 91 x W: 77 x D: 50 cm
3075 MSRP $1,845

E **PONCE BAR CART**
Vintage Brass
H: 32" x W: 33" x D:14"
H: 81 x W: 84 x D: 36 cm
6539 MSRP $1,500

F **LISBON BAR CART**
Vintage Brass/Antiqued Mirror Border
H: 33.5" x W: 32.5" x D: 17"
H: 85 x W: 83 x D: 43 cm
*finish may vary
6525 MSRP $1,500

C

D

E

F

A

B

A **WORCHESTER ETAGERE**
Silver Leafed Iron/Clear Glass
H: 61" x W: 24" x D: 10"
H: 155 x W: 61 x D: 25 cm
*finish may vary
2090 MSRP $1,800

B **WORCHESTER BOOKSHELF**
Silver Leafed Iron/Clear Glass
H: 83" x W: 40" x D: 13"
H: 211 x W: 102 x D: 33 cm
*finish may vary
6833 MSRP $5,310

C

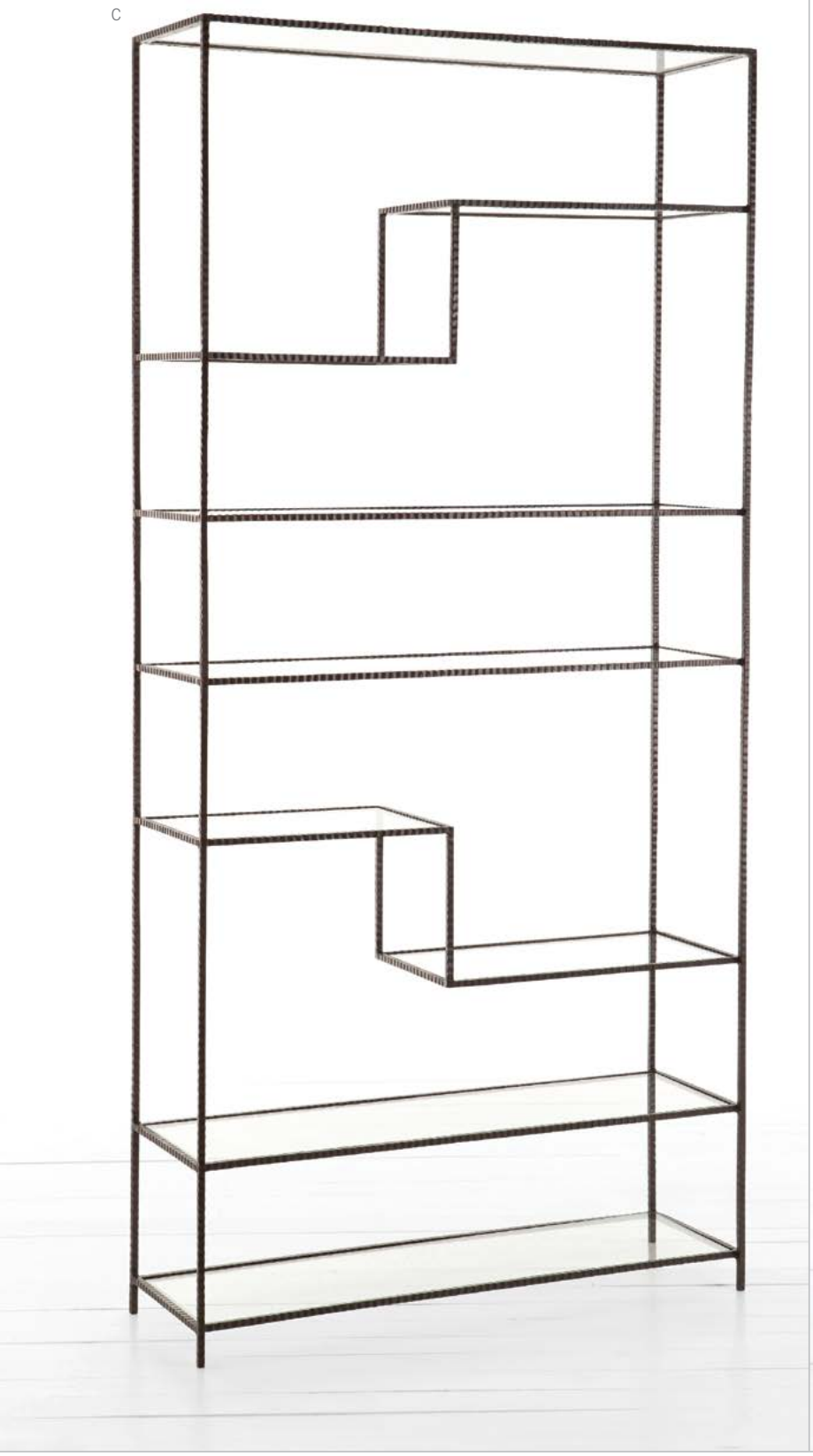

D

C **WORCHESTER BOOKSHELF**
Natural Iron/Clear Glass
H: 83" x W: 40" x D: 13"
H: 211 x W: 102 x D: 33 cm
6818 MSRP $4,980

D **WORCHESTER ETAGERE**
Gold Leafed Iron/Clear Glass
H: 61" x W: 24" x D: 10"
H: 155 x W: 61 x D: 25 cm
*finish may vary
2089 MSRP $1,800

A

B

A **HATTIE CONSOLE**
Gold Leafed Iron/White Marble
H: 30" x W: 47" x D: 14"
H: 76 x W: 119 x D: 36 cm
*marble and finish may vary
6981 MSRP $2,700

B **WORCHESTER CONSOLE**
Silver Leafed Iron/Clear Glass
H: 33.5" x W: 40" x D: 13"
H: 85 x W: 102 x D: 33 cm
*finish may vary
4109 MSRP $2,190

C

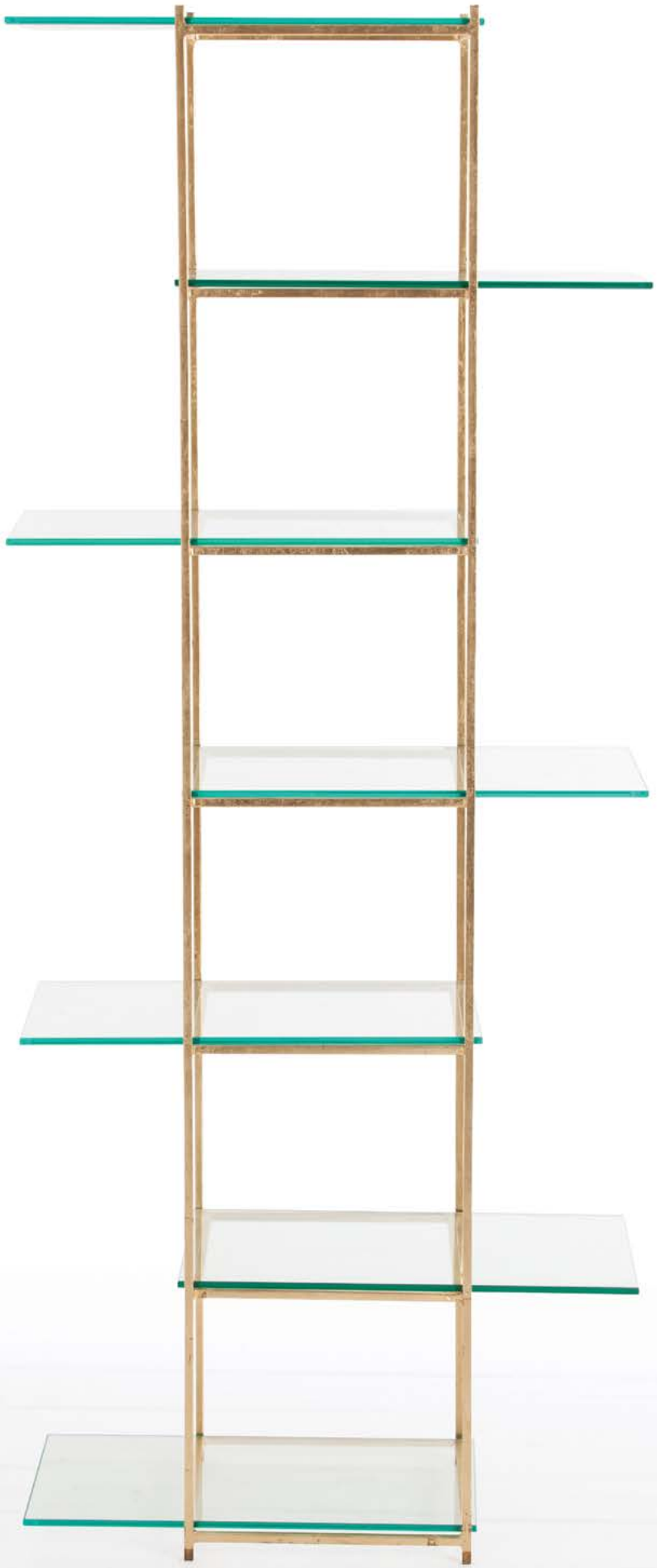

ALTERNATE VIEW

C **BROOKS ETAGERE**
Gold Leafed Iron/Clear Glass
H: 80" x 24" Sq
H: 203 x 61 cm Sq
*finish may vary
6830 MSRP $3,600

90% in stock, ships in 72 hours

A

B

A **BENNETT ROOM SCREEN**
Natural Iron
H: 88" x W: 30" x D: 16"
H: 224 x W: 76 x D: 41 cm
4829 MSRP $4,200

B **DONOVAN ETAGERE**
Natural Iron/Natural Wood
H: 67" x W: 16.5" x D: 15"
H: 170 x W: 42 x D: 38 cm
*finish may vary
2733 MSRP $2,550

C **TERRACE BOOKSHELF**
Natural Iron/Sandblasted Grey Wood
H: 82.5" x W: 47" x D: 15"
H: 210 x W: 119 x D: 38 cm
*finish may vary
2664 MSRP $4,050

C

A

A **FLINT CAMPAIGN DESK**
Natural Iron
H: 30" x W: 50" x D: 24"
H: 76 x W: 127 x D: 61 cm
6338 MSRP $3,150

B

B **TWAIN DESK**
Distressed Natural Iron/Clear Glass
H: 30" x W: 48" x D: 23"
H: 76 x W: 122 x D: 58 cm
2029 MSRP $1,800

C

C **TAPLEY DESK**
Natural Iron
H: 30" x W: 56" x D: 22"
H: 76 x W: 142 x D: 56 cm
2040 MSRP $2,700

D

D **TAHITI CONSOLE**
Light Walnut/Dark Walnut Finished Wood
H: 30" x W: 47.5" x D: 18"
H: 76 x W: 121 x D: 46 cm
2230 MSRP $675

A

B

C

D

A LISA LUBY RYAN COLLECTION
LYON CABINET
Rusted Natural Iron/ Distressed Wood
H: 30″ x W: 30″ x D: 20″
H: 76 x W: 76 x D: 51 cm
*finish may vary
DR2045 MSRP $3,450

B LISA LUBY RYAN COLLECTION
PARIS SHUTTER CABINET
Rusted Natural Iron/ Distressed Wood
H: 36″ x W: 48″ x D: 24″
H: 91 x W: 122 x D: 61 cm
*finish may vary
DR2057 MSRP $5,040

C **KENMORE CABINET**
Washed Limed Oak Wood/Antique Brass
H: 33.5″ x W: 43″ x D: 17.5″
H: 85 x W: 109 x D: 44 cm
*finish may vary
6978 MSRP $2,700

D **FINN CABINET**
Painted Blue Iron/Mesh
H: 32.5″ x W: 48″ x D: 20″
H: 83 x W: 122 x D: 51 cm
*finish may vary
2487 MSRP $3,000

A

B

A **LAURENT CHAIR**
Top Grain Dark Gray Leather/Ebony Finished Wood/Antique Brass
H: 26.5" x W: 31.5" x D: 33"
H: 67 x W: 80 x D: 84 cm
*leather may vary
6621 MSRP $5,550

B **LAURENT CHAIR**
Mottled Brown Leather/Mahogany Wood/Antique Brass
H: 26.5" x W: 31.5" x D: 33"
H: 67 x W: 80 x D: 84 cm
*leather may vary
2996 MSRP $5,550

C **DANFORTH CHAIR**
Top Grain Chestnut Leather/Walnut Wood
H: 31" x W: 22" x D: 28"
H: 79 x W: 56 x D: 71 cm
*leather may vary
2596 MSRP $2,070

D **DANFORTH CHAIR**
Top Grain Dove Leather/Black Wood
H: 31" x W: 22" x D: 28"
H: 79 x W: 56 x D: 71 cm
*leather may vary
6740 MSRP $2,070

E BARRY DIXON COLLECTION
WILLOW CHAIR
Natural Willow
H: 45" x W: 26" x D: 27.5"
H: 114 x W: 66 x D: 70 cm
DD5001 MSRP $1,800

C

D

E

*ALTERNATE VIEW

A

B

C

D

D **CALVIN CHAIR**
Top Grain Black Leather/Antique Brass
H: 31" x W: 26.5" x D: 25.5"
H: 79 x W: 67 x D: 65 cm
*leather may vary
2671 MSRP $3,300

E **CALVIN BAR STOOL**
Top Grain Black Leather/Antique Brass
H: 39" x W: 24" x D: 21"
H: 99 x W: 61 x D: 53 cm
*leather may vary
2670 MSRP $3,300

E

A **CALVIN COUNTER STOOL**
Top Grain Brindle Leather/ Antique Brass
H: 29" x W: 23.5" x D: 22"
H: 74 x W: 60 x D: 56 cm
*leather may vary
2804 MSRP $2,700

B **CALVIN CHAIR**
Top Grain Brindle Leather/Antique Brass
H: 31" x W: 26.5" x D: 25.5"
H: 79 x W: 67 x D: 65 cm
*leather may vary
2805 MSRP $3,300

C **CALVIN BAR STOOL**
Top Grain Brindle Leather/ Antique Brass
H: 35" x W: 23.5" x D: 22"
H: 89 x W: 60 x D: 56 cm
*leather may vary
2803 MSRP $3,000

A

B

C

A **CALVIN COUNTER STOOL**
Top Grain Dove Leather/Polished Nickel
H: 29" x W: 23.5" x D: 22"
H: 74 x W: 60 x D: 56 cm
*leather may vary
2821 MSRP $2,700

B **CALVIN CHAIR**
Top Grain Dove Leather/Polished Nickel
H: 31" x W: 26.5" x D: 25.5"
H: 79 x W: 67 x D: 65 cm
*leather may vary
2822 MSRP $3,300

C **CALVIN BAR STOOL**
Top Grain Dove Leather/Polished Nickel
H: 35" x W: 23.5" x D: 22"
H: 89 x W: 60 x D: 56 cm
*leather may vary
2820 MSRP $3,000

D

E

D **CALVIN COUNTER STOOL**
Top Grain Black Leather/Black and White Hide/Polished Nickel
H: 33"x W: 23" x D: 22"
H: 84 x W: 61 x D:53 cm
*leather and hide may vary
2763 MSRP $3,000

E **CALVIN BAR STOOL**
Top Grain Black Leather/Black & White Hide/Polished Nickel
H: 39" x W: 24" x D: 21"
H: 84 x W: 61 x D: 56 cm
*leather and hide may vary
2750 MSRP $3,300

*ABOVE SHOWS VARIANCE IN HIDE PATTERN

A

B

C

D

E

F

A **WYNDHAM SWIVEL COUNTER STOOL**
Black Stained Wood/Polished Nickel
H: 25" x 16" Tri
H: 64 x 41 cm Tri
2413 MSRP $630

B LISA LUBY RYAN COLLECTION
ROCHEFORT BAR STOOL
Natural Iron/Distressed Waxed Wood/
Natural Linen Slipcover
H: 30.5" x W: 16" x D: 14"
H: 77 x W: 41 x D: 36 cm
*finish may vary
DR6010 MSRP $720

C LISA LUBY RYAN COLLECTION
ROCHEFORT COUNTER STOOL
Natural Iron/Distressed Waxed Wood/
Natural Linen Slipcover
H: 24" x W: 15.5" x D: 12.5"
H: 61 x W: 32 x D: 42 cm
*finish may vary
DR6009 MSRP $615

D **PALMER COUNTER STOOL**
Black Leather/Brushed Brass
H: 24" x 15" Sq
H: 61 x 38 cm Sq
6994 MSRP $1,500

E **WYNDHAM SWIVEL COUNTER STOOL**
Natural Waxed Wood/ Vintage Brass
H: 25 x 16" Tri
H: 64 x 41 cm Tri
6698 MSRP $690

F **WYNDHAM SWIVEL BAR STOOL**
Natural Waxed Wood/ Vintage Brass
H: 29.5" x 19" Tri
H: 75 x 48 cm Tri
6699 MSRP $750

G **HENSON COUNTER STOOL**
Natural Waxed Wood/
Natural Iron
H: 28.5" x 16" Dia
H: 72 x 41 Dia cm
*finish may vary
6535 MSRP $630

H **HINKLEY BAR STOOL**
Natural Waxed Wood/Natural Iron
H: 34.5" x 16" Dia
H: 88 x 41 Dia cm
*finish may vary
2747 MSRP $690

I **CAYMUS BAR STOOL**
Natural Waxed Wood/Natural Iron
H: 30" x 14" Dia
H: 76 x 36 Dia cm
*finish may vary
6121 MSRP $900

A

A **ZEPHYR BENCH**
Top Grain Dove Leather/Polished Nickel
H: 19" x W: 63" x D: 18.5"
H: 48 x W: 159 x D: 47 cm
*leather may vary
6815 MSRP $3,450

B

B **ZEPHYR BENCH**
Top Grain Black Leather/Antique Brass
H: 19" x W: 63" x D: 18.5"
H: 48 x W: 159 x D: 47 cm
*leather may vary
6073 MSRP $3,900

C

C **ZEPHYR WIDE BENCH**
Top Grain Black Leather/Antique Brass
H: 19" x W: 52.5" x D: 33"
H: 48 x W: 133 x D: 84 cm
*leather may vary
2044 MSRP $5,100

D

D WINDSOR SMITH COLLECTION
ASTA BENCH
Polished Brass/White Muslin
H: 18" x W: 51.5" x D: 21"
H: 46 x W: 131 x D: 53 cm
DS9015 MSRP $3,750

E

F

E WINDSOR SMITH COLLECTION
ZEPHYR CHAIR
Polished Brass/White Muslin
H: 31.5" x W: 23" x D: 19"
H: 80 x W: 58 x D: 48 cm
DS9018 MSRP $2,385

F WINDSOR SMITH COLLECTION
ZEPHYR COUNTER STOOL
Polished Brass/White Muslin
H: 38.5" x W: 23" x D: 19"
H: 98 x W: 58 x D: 48 cm
DS9017 MSRP $2,685

A

B

C

A **CRISTOPHE BENCH**
Ash Linen/Grey Ash/Nickel Ferrules
H: 18" x W: 59" x D: 27"
H: 46 x W: 150 x D: 69 cm
8000 MSRP $2,600

B **CRISTOPHE BENCH**
Sharkskin Velvet/Grey Ash/Nickel Ferrules
H: 18" x W: 59" x D: 27"
H: 46 x W: 150 x D: 69 cm
8002 MSRP $2,600

C **CRISTOPHE BENCH**
Graphite Leather/Grey Ash/Nickel Ferrules
H: 18" x W: 59" x D: 27"
H: 46 x W: 150 x D: 69 cm
8003 MSRP $4,200

D

E

F

D **CRISTOPHE BENCH**
Oatmeal Linen/Dark Walnut/Brass Ferrules
H: 18" x W: 59" x D: 27"
H: 46 x W: 150 x D: 69 cm
8001 MSRP $2,600

E **CRISTOPHE BENCH**
White Muslin/Dark Walnut/Brass Ferrules
H: 18" x W: 59" x D: 27"
H: 46 x W: 150 x D: 69 cm
8005 MSRP $2,000

F **CRISTOPHE BENCH**
White Muslin/Grey Ash/Nickel Ferrules
H: 18" x W: 59" x D: 27"
H: 46 x W: 150 x D: 69 cm
8006 MSRP $2,000

A

B

C

D

A **FELICE CONSOLE**
Natural Iron/Antique Brass/Black Glass
H: 35" x W: 61.5" x D: 15.5"
H: 89 x W: 156 x D: 39 cm
6168 MSRP $4,200

B **FELICE LARGE BENCH**
Natural Linen/Black Iron/Vintage Brass
H:17" x W: 63" x D: 15.5"
H: 43 x W: 160 x D: 39 cm
6772 MSRP $2,640

C **FELICE SMALL BENCH**
Natural Linen/Black Iron/Antique Brass
H: 17.5" x W: 19.5" x D: 16"
H: 44 x W: 50 x D: 41 cm
4138 MSRP $780

D WINDSOR SMITH COLLECTION
ELIS BENCH
Moss Gray Suede/Polished Brass
H: 19.5" x W: 60.5" x D: 19"
H: 50 x W: 154 x D: 48 cm
*suede may vary
DS2000 MSRP $7,800

E WINDSOR SMITH COLLECTION
ELIS STOOL
Moss Gray Suede/Polished Brass
H: 18.5" x 18" Sq
H: 47 x 46 cm Sq
*suede may vary
DS2001 MSRP $4,050

F WINDSOR SMITH COLLECTION
DIANA STOOL
Moss Gray Suede/Polished Brass
H: 17" x 22" Sq
H: 43 x 56 cm Sq
*suede may vary
DS2019 MSRP $2,235

E

F

A

A BARRY DIXON COLLECTION
MOSQUITO LARGE BENCH
Natural Linen/Natural Iron
H: 19" x W: 57.5" x D: 16"
H: 48 x W: 146 x D: 41 cm
DD2056 MSRP $2,220

B BARRY DIXON COLLECTION
MOSQUITO SMALL BENCH
Natural Linen/Natural Iron
H: 19" x W: 19.5" x D: 16"
H: 48 x W: 50 x D: 41 cm
DD2015 MSRP $825

C **CALDER STOOL**
Distressed Bronze
H: 19.5" x W: 22" x D: 15"
H: 50 x W: 56 x D: 38 cm
2433 MSRP $750

B

C

D

E

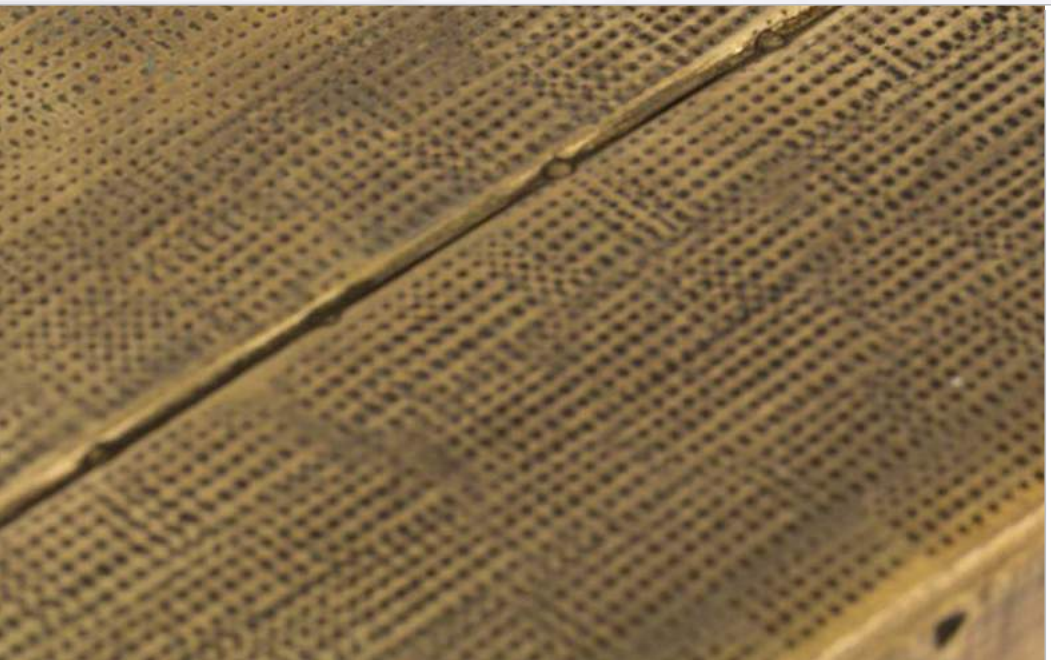

D BARRY DIXON COLLECTION
ATLAS BENCH/COCKTAIL TABLE
Limed Wash Wood/Natural Waxed Iron/
Natural Linen Removable Cushion
H: 21.5" x W: 58" x D: 19"
H: 55 x W: 147 x D: 48 cm
*finish may vary
DD2016 MSRP $2,700

E BARRY DIXON COLLECTION
ATLAS BENCH
Aged Brass Clad/Natural Iron
H: 19" x W: 69.5" x D: 19"
H: 48 x W: 177 x D: 48 cm
*clad may vary
DD2061 MSRP $3,600

A

B

ALTERNATE VIEW

C

D

A **PRATT OTTOMAN**
Black Hide/Polished Brass
H: 20" x 16.5" Dia
H: 51 x 42 Dia cm
*hide may vary
6060 MSRP $1,500

B **PRATT OTTOMAN**
Black Hide/Polished Nickel
H: 20" x 16.5" Dia
H: 51 x 42 Dia cm
*hide may vary
6061 MSRP $1,500

C **PRATT OTTOMAN**
Top Grain Brindle Leather/Brushed Brass
H: 20" x 16.5" Dia
H: 51 x 42 Dia cm
*leather may vary
6143 MSRP $1,500

D **EFRON STOOL**
Black Hide/Polished Brass/Matte Stainless Steel Interior
H: 17.5" x 14.5" Dia
H: 44 x 37 Dia cm
*hide may vary
6098 MSRP $1,500

E **DECKER BENCH**
Orange Hide/Stainless Steel
H: 20.5" x W: 24.5" x D: 18.5"
H: 52 x W: 62 x D: 47 cm
*hide may vary
4022 MSRP $3,000

E

F **EMMIT OTTOMAN**
Top Grain Black Leather/Brushed Brass
H: 19" x 17" Sq
H: 48 x 43 cm Sq
*leather may vary
6141 MSRP $2,100

F

A

B

C

A **HUGO OTTOMAN**
Off-White Hide/Gold Leafed Accents
H: 19" x 16" Sq
H: 48 x 41 cm Sq
*hide may vary
2705 MSRP $1,500

B **PRATT OTTOMAN**
Top Grain White Leather/Brushed Brass
H: 20" x 16.5" Dia
H: 51 x 42 Dia cm
*leather may vary
6142 MSRP $1,500

C **WIMBERLEY OTTOMAN**
Off-White Hide/Dark Walnut Wood
H: 20" x 14.5" Dia
H: 48 x 41 Dia cm
*hide may vary
6751 MSRP $1,200

*ABOVE SHOWS VARIANCE IN HIDE PATTERN

D

E

D **HUGO OTTOMAN**
Black and White Hide
H: 19" x 16" Sq
H: 48 x 41 cm Sq
*hide may vary
2210 MSRP $1,290

E **OTTO OTTOMAN**
Brown and White Hide
H: 19" x 16" Sq
H: 48 x 41 cm Sq
*hide may vary
2697 MSRP $1,350

ARTERIORS®

Upholstery Collection

Sixteen artful frames representing a curated range of looks designed to compliment and complete our lifestyle brand. All made in the USA.

All of our frames are constructed with either 8-gauge sinuous spring no sag seating or a durable webbing suspension system.

We use a WOCA natural oil stain, which is plant-based, sustainable, and contains no artificial pigments or preservatives.

LUCIA

3 Buying Options

Stock represents the more popular fabric & frame combinations and **ships within 72 hours**. To check availability, visit our website Arteriorshome.com/furniture/upholstery.

Muslin is an Arteriors exclusive program conceived for those who want to create bespoke designs using their own workrooms and fabrics. **All frames are stocked and ship within 72 hours** ready to be reupholstered or slipcovered.

Made-to-order...choose from 13 materials and 2 wood finishes. Visit Arteriorshome.com to view these options. Your specially made piece will ship in 7-10 weeks.

Our frames are constructed with FSC-Certified, kiln-dried 5/4 hardwoods that have been sustainably sourced and built to last.
*We offer a lifetime warranty on the frame.

MCCARTNEY

A

A **MARLEY CHAIR**
Shown in Moss Leather/Dark Walnut
W: 29" x D: 29.5" x H: 31"
W: 74 x D: 75 x H: 79 cm
Muslin $2,500/As Shown $4,800
1A08T03D

B

B **MARLEY SETTEE**
Shown in Moss Leather/Dark Walnut
W: 60" x D: 31" x H: 30"
W: 153 x D: 79 x H: 77 cm
Muslin $3,500/As Shown $7,400
2A08T03D

C

C **DUPREY SETTEE**
Shown in Sage Velvet/Dark Walnut
W: 60" x D: 31" x H: 30"
W: 153 x D: 79 x H: 77 cm
Muslin $2,700/As Shown $3,600
2A06V03D

D

D **DUPREY CHAIR**
Shown in Graphite Leather/Dark Walnut
W: 29" x D: 30.5" x H: 29.5"
W: 74 x D: 78 x H: 75 cm
Muslin $2,200/As Shown $4,700
1A06T02D

A

A **BECK CHAIR**
Shown in Sharkskin Velvet/Gray Ash
W: 27.5" x D: 31.5" x H: 36"
W: 70 x D: 80 x H: 92 cm
*cushion 90% feather/10% down
Muslin $2,600/As Shown $3,900
1A12V06G

B

B **CHRISTOPHE SOFA**
Shown in Moss Leather/Dark Walnut
W: 80" x D: 32" x H: 30"
W: 204 x D: 82 x H: 77 cm
Muslin $4,200/As Shown $9,900
3A04T03D

C

C **MCCARTNEY SOFA**
Shown in Charcoal Leather/Dark Walnut
W: 84" x D: 34" x H: 30"
W: 214 x D: 87 x H: 77 cm
Muslin $6,200/As Shown $14,500
3A09T01D

D **SEGER CHAIR**
Shown in Graphite Leather/Grey Ash
W: 29.5" x D: 32" x H: 35"
W: 29.5 x D: 82 x H: 89 cm
*cushion 90% feather/10% down
Muslin $2,700/As Shown $6,000
1A13T02G

D

A

A **SPRINGSTEEN CHAIR**
Shown in Harbor Velvet/Champagne Lamenent
W: 30" x D: 35" x H: 32.5"
W: 77 x D: 89 x H: 83 cm
Muslin $2,300/As Shown $4,100
1A11V01C

B

B **TURNER SOFA**
Shown in Graphite Leather/Dark Walnut
W: 108" x D: 39.5" x H: 30.5"
W: 275 x D: 101 x H: 78 cm
Muslin $4,800/As Shown $9,100
3A10T02D

C

C **LUCIA SETTEE**
Shown in Sand Velvet/Grey Ash
W: 72.5" x D: 32" x H: 32"
W: 185 x D: 82 x H: 82 cm
Muslin $3,800/As Shown $5,000
2A01V04G

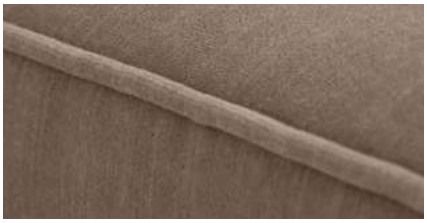

D **LUCIA CHAIR**
Shown in Charcoal Leather/Grey Ash
W: 27" x D: 31" x H: 32"
W: 69 x D: 79 x H: 82 cm
Muslin $2,800/As Shown $4,300
1A01T01G

D

A

A **MUSTIQUE SETTEE**
Shown in Ash Linen/Dark Walnut
W: 68" x D: 31" x H: 30"
W: 173 x D: 79 x H: 77 cm
Muslin $5000/As Shown $6,600
2A03L01D

B **MUSTIQUE CHAIR**
Shown in Sharkskin Velvet/Dark Walnut
W: 27" x D: 30.5" x H: 30"
W: 69 x D: 78 x H: 77 cm
Muslin $3,000/As Shown $4,000
1A03V06D

B

C

CASTER ONLY AVAILABLE IN ANTIQUE BRASS

C **VERNON SETTEE**
Shown in Moss Leather/Dark Walnut
W: 60" x D: 29" x H: 34"
W: 152 x D: 74 x H: 86 cm
Muslin $4,800/As Shown $9,100
2A02T03D

D

D **RUPERT SOFA**
Shown in Sharkskin Velvet/Dark Walnut
W: 80" x D: 40" x H: 31"
W: 203 x D: 102 x H: 79 cm
Starting at $6,200/As Shown $6,200
3A05V06D

90

PERCENT IN-STOCK

Ships within 72 hours

WALL DÉCOR

So much more than simply providing a reflection, mirrors and their placement have become an art form. No longer do we expect to see just one, alone, in the middle of a wall—multiples are now hung with an emphasis on the pattern they create, full-length mirrors are horizontal and large mirrors are leaning instead of hanging. Our eclectic wall sculptures can be layered in unexpected ways as well, allowing you to create depth and movement in any space.

A

A **FALLON MIRROR**
Gold Leafed Resin/Plain Mirror
H: 52" x W: 32" x D: 5"
H: 132 x W: 81 x D: 13 cm
*security cleat - vertical or horizontal
*finish may vary
9115 MSRP $2,250

B

B **SHEBA MIRROR**
Gold Leafed Aluminum/Plain Mirror
H: 46" x W: 28" x D: 1"
H: 117 x W: 71 x D: 3 cm
*security cleat
*finish may vary
2698 MSRP $1,500

C

C **EVELYN MIRROR**
Gold Leafed Wood/Beveled Mirror
H: 36" x W: 26" x D: 2"
H: 91 x W: 66 x D: 5 cm
*security cleat - vertical or horizontal
*finish may vary
6180 MSRP $1,050

A

A **NIKOS MIRROR**
Antique Brass Clad/Speckled Antiqued Mirror
H: 50" x W: 25" x D: 1.5"
H: 127 x W: 64 x D: 4 cm
*security cleat
*finish may vary
4821 MSRP $1,500

B

B **BRENDA RECTANGULAR MIRROR**
Antique Brass Clad/Plain Mirror
H: 52.5" x W: 34" x D: 2"
H: 133 x W: 86 x D: 5 cm
*security cleat - vertical or horizontal
*finish may vary
2683 MSRP $1,800

C **AINSLEY MIRROR**
Antique Brass Clad/Beveled Mirror
60" Dia x D: 2.5"
152 Dia x D: 6 cm
*security cleat
*finish may vary
2688 MSRP $4,200

A

A **OLYMPIA MIRROR**
Antique Brass/Beveled Mirror
41.5" Dia x D: 2.5"
105 Dia x D: 6 cm
*security cleat
2284 MSRP $1,410

B

B **OLYMPIA OVAL MIRROR**
Antique Brass/Plain Mirror
H: 40.5" x W: 34" x D: 2"
H: 103 x W: 86 x D: 5 cm
*security cleat - vertical or horizontal
2285 MSRP $1,410

C **ELTON MIRROR**
Antique Brass Clad/Beveled Mirror
42" Dia x D: 2"
107 Dia x D: 5 cm
*security cleat
*clad may vary
6171 MSRP $2,100

D **OLYMPIA SMALL MIRROR**
Antique Brass/Plain Mirror
15" Dia x D: 1"
38 Dia x D: 3 cm
*security cleat
6236 MSRP $210

A

A **POLLOCK MIRROR**
Gold Leafed Iron/Beveled Mirror
H: 46" x W: 34" x D: 1"
H: 117 x W: 86 x D: 3 cm
*security cleat vertical or horizontal
2015 MSRP $1,950

B **BRANSEN MIRROR**
Polished Brass/Bronze/Plain Mirror
H: 39.5" x W: 29.5" x D: 1"
H: 100 x W: 75 x D: 3 cm
*security cleat - vertical or horizontal
2611 MSRP $3,000

B

C

D

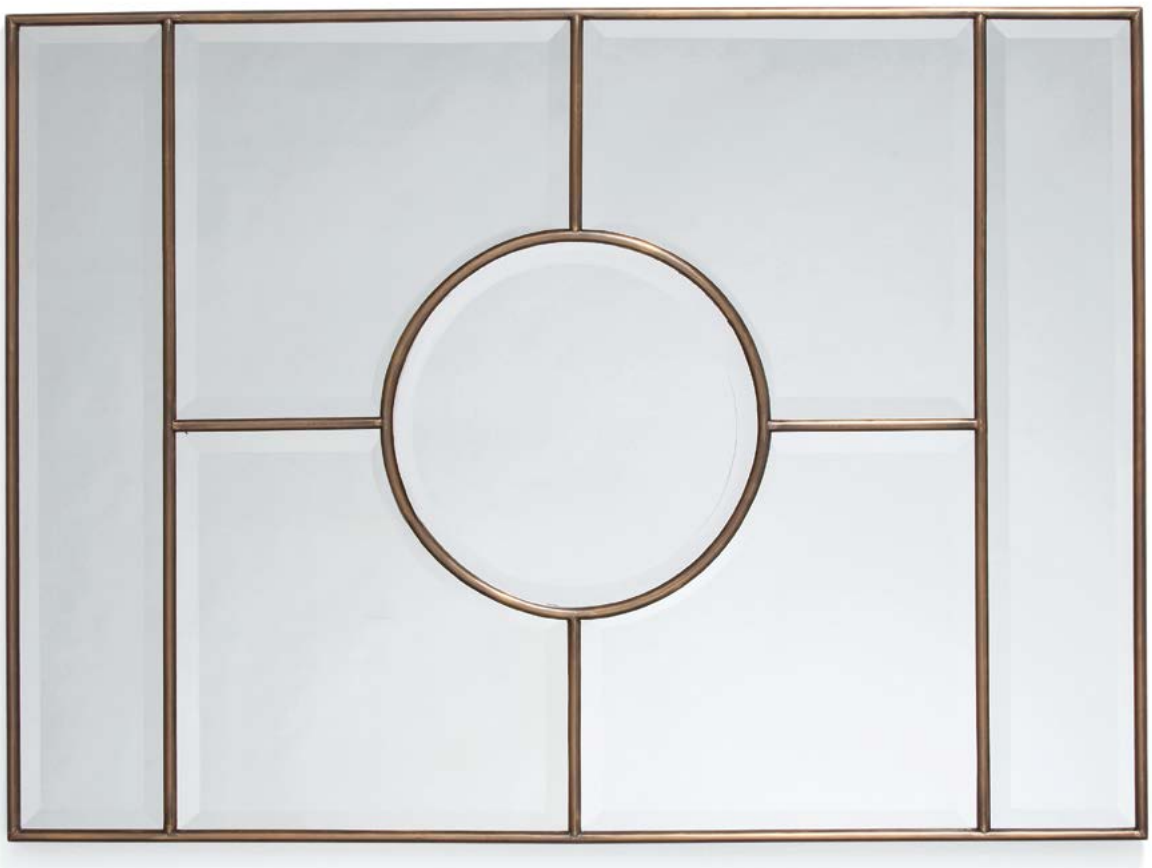

C **PORTER MIRROR**
Antiqued Gold Leafed Iron/Plain Mirror
H: 54" x W: 43" x D: 2"
H: 137 x W: 109 x D: 5 cm
*keyhole hanger - vertical or horizontal
3138 MSRP $1,965

D **BRONSAN MIRROR**
Antique Brass/Beveled Mirror
H: 44" x W: 32" x D: 1"
H: 112 x W: 81 x D: 3 cm
*d ring hangers - vertical or horizontal
2198 MSRP $1,950

A

A **ELANA MIRROR**
Bronze/Polished Brass/Plain Mirror
23.5" Sq x D: 1"
60 Sq x D: 3 cm
*security cleat - vertical or horizontal
6170 MSRP $1,200

B

B **ROWSELL MIRROR**
Matte Brass/Plain Mirror
35" Dia x D: 4.5"
89 Dia x D: 11 cm
*security cleat
2056 MSRP $2,100

C

D

C **PITNEY MIRROR**
Matte Brass/Polished Brass/Plain Mirror
H: 27.5" x W: 24.5" x D: 1.5"
H: 70 x W: 62 x D: 4 cm
*security cleat - vertical or horizontal
2081 MSRP $750

D **OLLIE MIRROR**
Polished Brass/Plain Mirror
30.5" Dia x D: 2.5"
77 Dia x D: 6 cm
*security cleat
2547 MSRP $1,200

A

A **KIRA LARGE MIRROR**
Champagne Leafed Iron/
Speckled Antiqued Mirror
42" Dia x D: 1"
107 Dia x D: 3 cm
*security cleat
*finish may vary
6204 MSRP $1,800

B

B **KIRA LARGE MIRROR**
Gold Leafed Iron/Speckled Antiqued Mirror
42" Dia x D: 1"
107 Dia x D: 3 cm
*security cleat
*finish may vary
4361 MSRP $1,800

C

C **NADINE MIRROR**
Champagne Leafed Iron/Plain Mirror/
Antiqued Mirror Border
H: 52" x W: 32" x D: 1"
H: 132 x W: 81 x D: 3 cm
*security cleat - vertical or horizontal
*finish may vary
6119 MSRP $1,740

D

D **FIONA MIRROR**
Plain Mirror/Antiqued Mirror Border/Clear
Beveled Glass Tile Frame
H: 26.5" x W: 19.5" x D: 1"
H: 67 x W: 50 x D: 3 cm
*security cleat - vertical or horizontal
*finish may vary
2696 MSRP $1,050

A

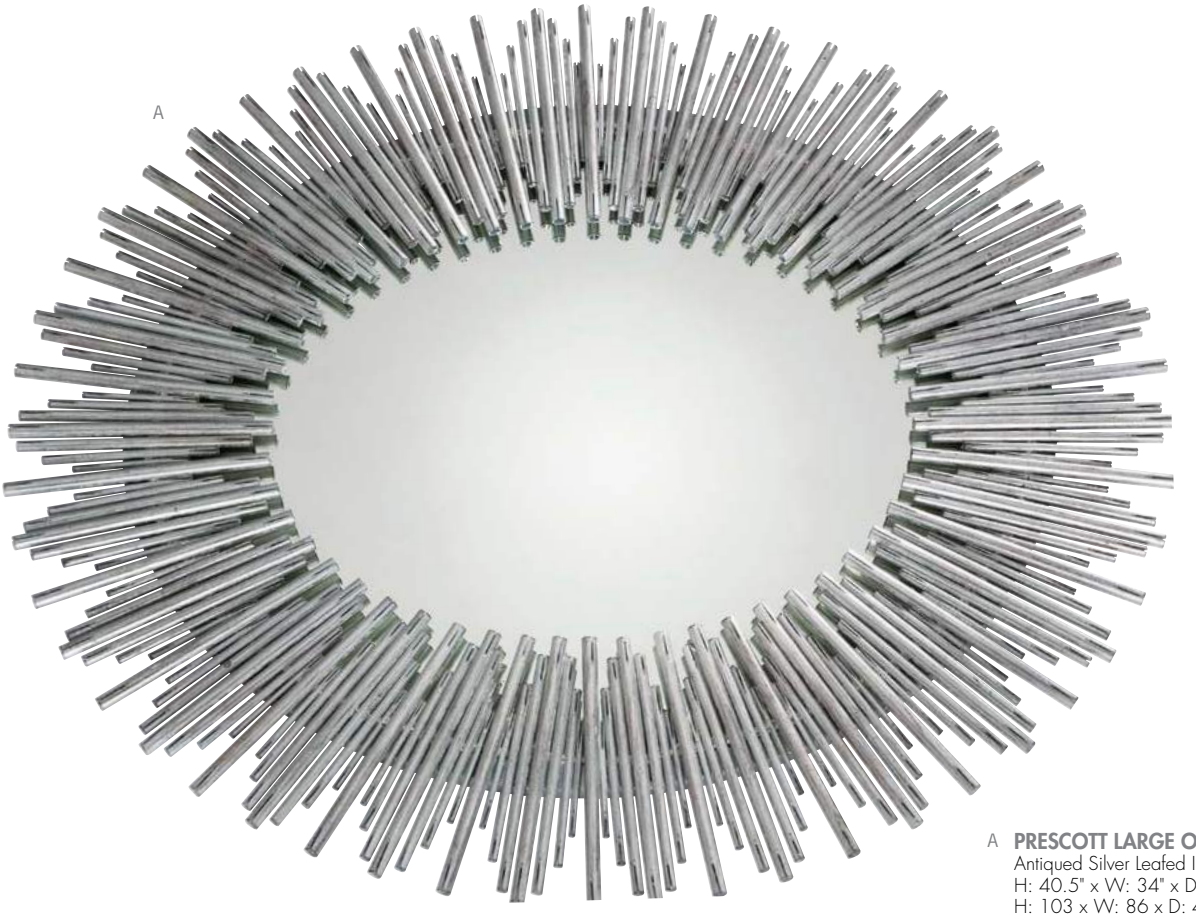

A **PRESCOTT LARGE OVAL MIRROR**
Antiqued Silver Leafed Iron/Plain Mirror
H: 40.5" x W: 34" x D: 1.5"
H: 103 x W: 86 x D: 4 cm
*security cleat - vertical or horizonal
6684 MSRP $1,560

B

B **GALAXY MIRROR**
Silver Iron/Plain Mirror
41.5" Dia x D: 1.5"
105 Dia x D: 4 cm
*d ring hangers
3163 MSRP $930

C

C **PRESCOTT LARGE OVAL MIRROR**
Antiqued Gold Leafed Iron/Plain Mirror
H: 40.5" x W: 34" x D: 1.5"
H: 103 x W: 86 x D: 4 cm
*security cleat- vertical or horizontal
6561 MSRP $1,650

D

D **PRESCOTT ROUND MIRROR**
Antiqued Gold Leafed Iron/Plain Mirror
30.5" Dia x D: 1.5"
41 Dia x D: 10 cm
*security cleat
2134 MSRP $1,200

A

A **GERVAIS MIRROR**
Antique Brass Clad/Convex Mirror
43" Dia x Adj. D: 3.5" - 10.5"
109 Dia x Adj. D: 9 - 27 cm
*adjustable mounting bracket
4352 MSRP $3,900

B **SHERMAN MIRROR**
Convex Mirror
38" Dia x D: 4"
97 Dia x D: 10 cm
*security cleat
2556 MSRP $3,300

A

A **FLETCHER MIRROR**
Antique Brass/Beveled Mirror
H: 48" x W: 24" x D: 1"
H: 122 x W: 61 x D: 3 cm
*mounting hook/security cleat
4081 MSRP $990

B

B **OLLIE MIRROR**
Polished Nickel/Plain Mirror
30.5" Dia x D: 2.5"
77 Dia x D: 6 cm
*d ring hangers
6497 MSRP $1,200

C **FLETCHER MIRROR**
Polished Nickel/Beveled Mirror
H: 48" x W: 24" x D: 1"
H: 122 x W: 61 x D: 3 cm
*mounting hook/security cleat
4082 MSRP $990

D **LANDER MIRROR**
Polished Nickel/Beveled Mirror
H: 33" x W: 23.5 " x D: 2"
H: 84 x W: 60 x D: 5 cm
*mounting bracket
3130 MSRP $885

E **EXPEDITION MIRROR**
Black Iron/Polished Nickel/
Black Leather/Plain Mirror
H: 30.5" x W: 18" x D: 2.5"
H: 77 x W: 46 x D: 6 cm
*mounting hook
3002 MSRP $615

A

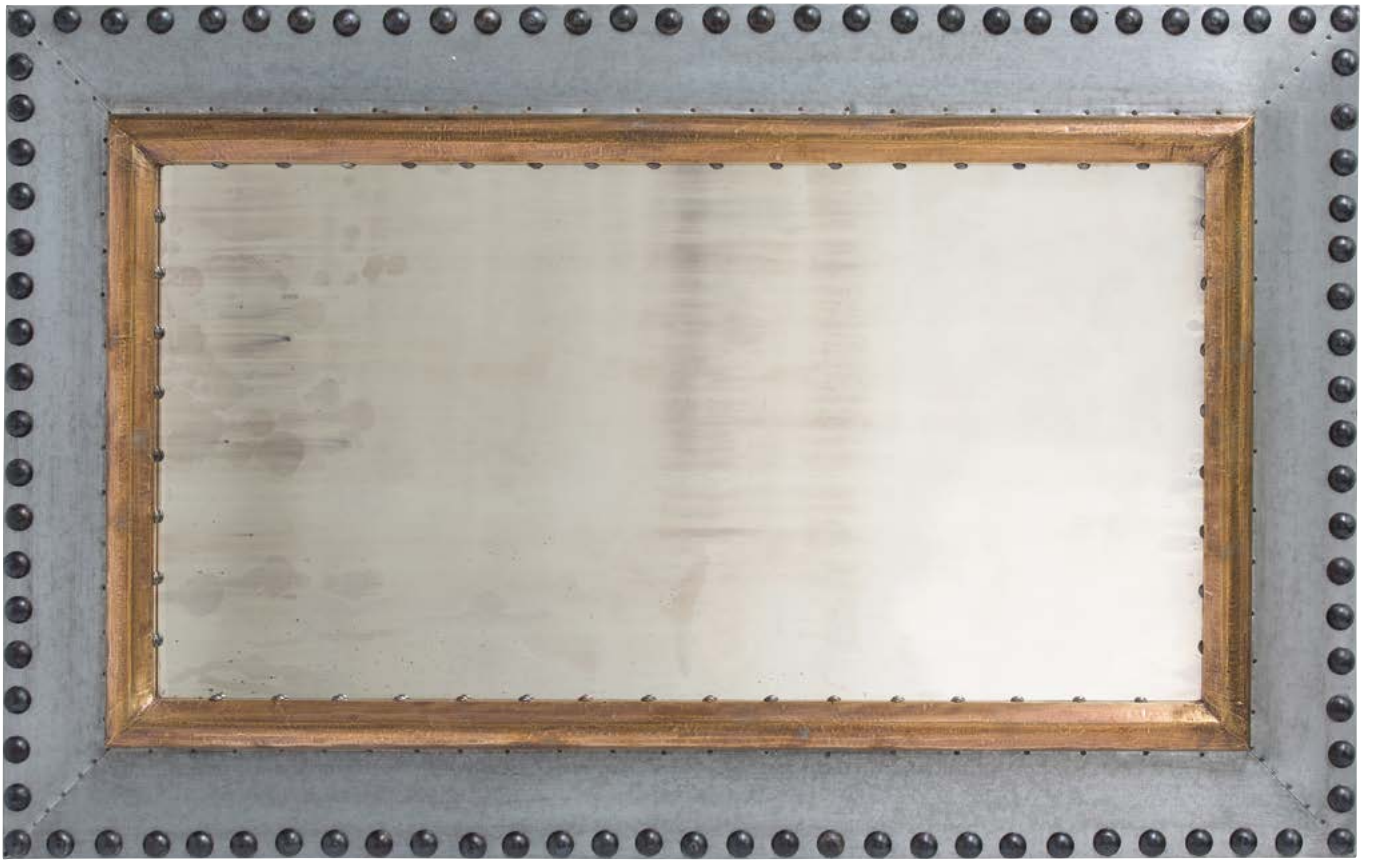

B

C

A **HARTLEY LARGE MIRROR**
Zinc Clad/Antique Brass Clad
Antiqued Mirror/Bronze Nailheads
H: 45" x W: 28" x D: 4"
H: 114 x W: 71 x D: 10 cm
*security cleat - vertical or horizontal
*finish may vary
2051 MSRP $1,200

B **HARTLEY MIRROR**
Zinc Clad/Antique Brass Clad
Convex Antique Mirror/Bronze Nailheads
22" Sq x D: 3"
56 Sq x D: 8 cm
*security cleat - vertical or horizontal
*finish may vary
4116 MSRP $720

C **BRENDA SQUARE MIRROR**
Antique Aluminum Clad/Beveled Mirror
42.5" Sq x D: 4.5"
108 Sq x D: 11 cm
*security cleat
*finish may vary
2684 MSRP $2,400

D

D **VERA MIRROR**
Plain Mirror/Antiqued Mirror Border/
Silver Leafed Wood
H: 81" x W: 35" x D: 1.5"
H: 206 x W: 89 x D: 4 cm
*wire hanger - vertical or horizontal
*finish may vary
6816 MSRP $2,925

A

A BARRY DIXON COLLECTION
AUTERO MIRROR
Natural Iron/Plain Mirror
H: 43" x W: 20.5" x D: 3"
H: 109 x W: 52 x D: 8 cm
*security cleat
DD2004 MSRP $1,200

B

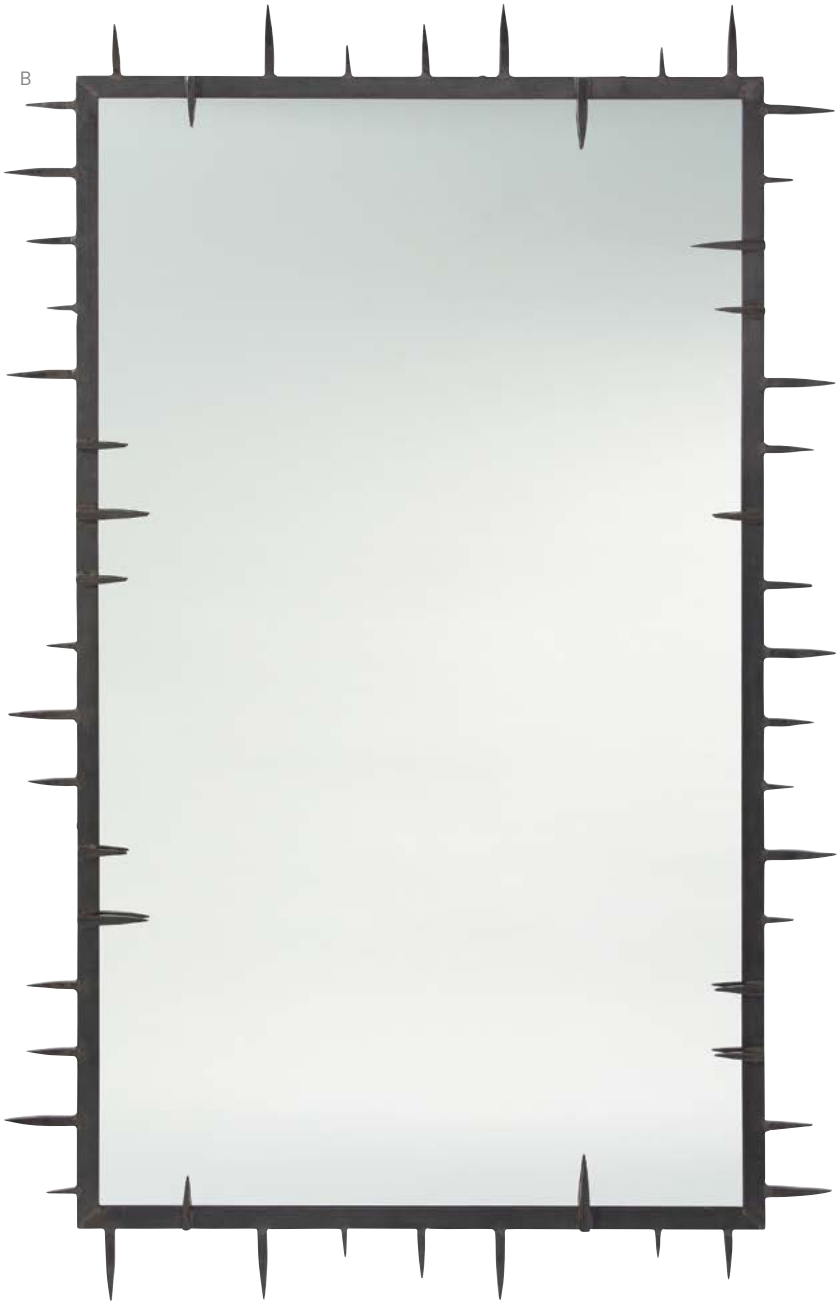

B BARRY DIXON COLLECTION
SPIKED RECTANGULAR MIRROR
Natural Iron/Plain Mirror
H: 60" x W: 37.5" x D: 1"
H: 152 x W: 95 x D: 3 cm
*security cleat - vertical or horizontal
DD2602 MSRP $2,250

C

C **TRUMAN MIRROR**
Blackened Iron/Plain Mirror
H: 82" x W: 26" x D: 2.5"
H: 208 x W: 66 x D: 6 cm
*security cleat - vertical or horizontal
6251 MSRP $3,300

A

B

A **BODEGA MIRROR**
Distressed White Driftwood/Plain Mirror
H: 54" x W: 31" x D: 5.5"
H: 137 x W: 79 x D: 14 cm
*wire hanger - vertical or horizontal
5407 MSRP $990

B BARRY DIXON COLLECTION
ISHTAR MIRROR
Chocolate Leather/Natural Linen/
Antiqued Brass/Beveled Mirror
H: 57.5" x W: 39.5" x D: 1.5"
H: 146 x W: 100 x D: 4 cm
*keyhole hanger - vertical or horizontal
DD2024 MSRP $2,835

C **KIPLING MIRROR**
Natural Oyster Shell/Plain Mirror
42" Dia x D: 5"
107 Dia x D: 13 cm
*wire hanger
*shells may vary
5416 MSRP $1,380

D **KARA MIRROR**
Natural Waxed Wood/Bone Inlay/Beveled Mirror
H: 46.5" x W: 34" x D: 1.5"
H: 118 x W: 86 x D: 4 cm
*security cleat - vertical or horizontal
4332 MSRP $1,500

C

D

A

A **ARIEL MIRROR**
Stained Antique Mirror/Recycled Convex Glass
H: 45.5" x W: 20" x D: 3"
H: 116 x W: 51 x D: 8 cm
*security cleat - vertical or horizontal
*finish may vary
2236 MSRP $1,650

B **LUXEMBOURG MIRROR**
Distressed Antiqued Mirror/Dark Stained Wood
H: 44.5" x W: 28" x D: 1.5"
H: 113 x W: 71 x D: 4 cm
*d ring hangers - vertical or horizontal
*finish may vary
6479 MSRP $1,380

B

DETAIL OF #2236

C

C **VERA LARGE MIRROR**
Convex Antiqued Mirror
36" Dia x D: 3.5"
92 Dia x D: 9 cm
*d ring hangers
*finish may vary
6822 MSRP $2,835

D

E

D **EDINBURG MIRROR**
Antiqued Mirror
H: 20" x W: 25" x D: 1.5"
H: 51 x W: 64 x D: 4 cm
*security cleat - vertical or horizontal
*finish may vary
6237 MSRP $510

E **DEMETRIE MIRROR**
Beveled Copper Mirror/Convex Antiqued Mirror
20" Sq x D: 3"
51 Sq x D: 8 cm
*security cleat - vertical or horizontal
*finish may vary
6241 MSRP $900

A

A **RIZZO WALL SCULPTURE**
Rusted Burnt Iron
H: 24" x W: 35.5" x D: 4.5"
H: 61 x W: 90 x D: 11 cm
*d ring hangers- vertical or horizontal
*finish may vary
3052 MSRP $720

B

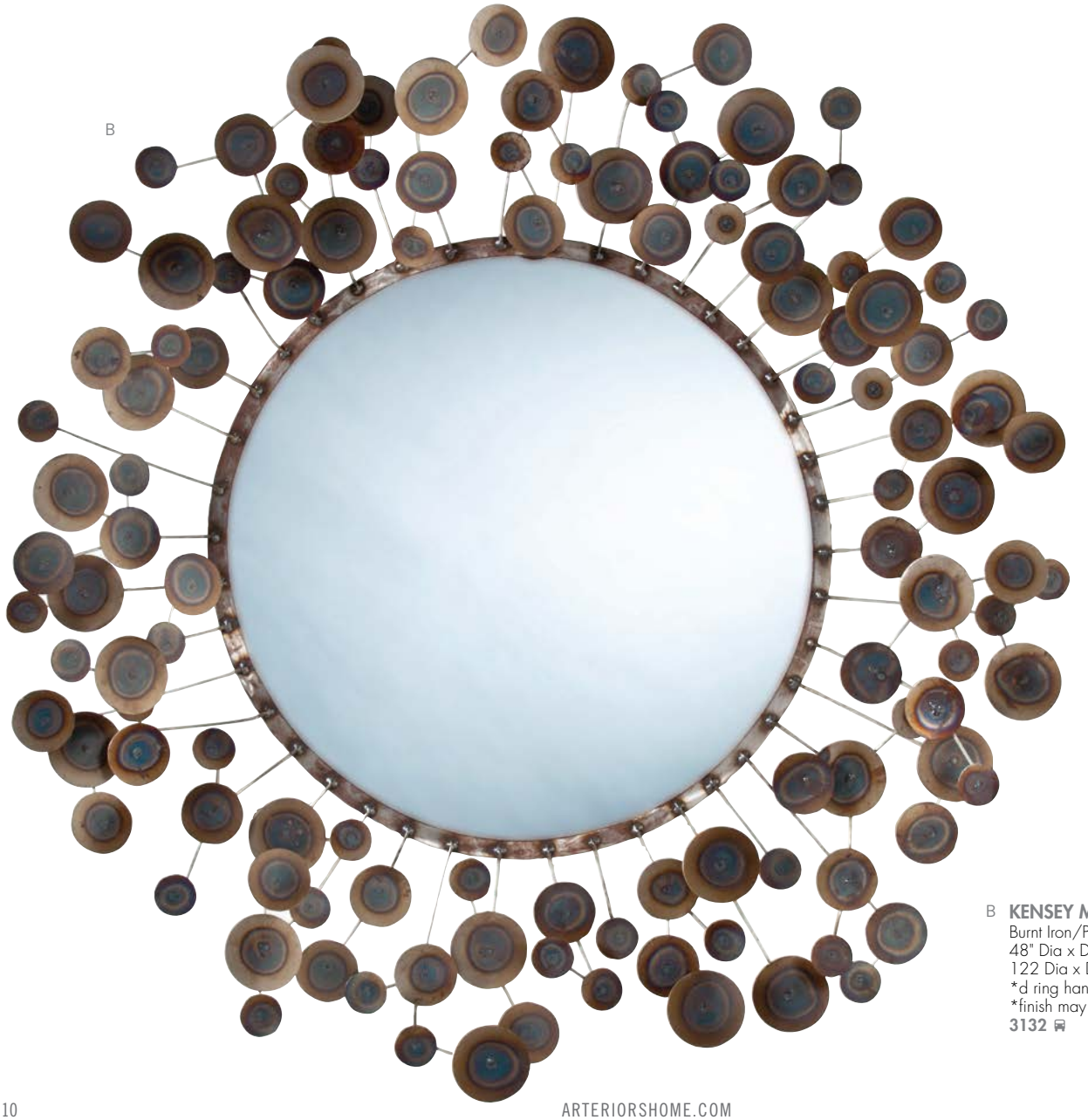

B **KENSEY MIRROR**
Burnt Iron/Plain Mirror
48" Dia x D: 4.5"
122 Dia x D: 11 cm
*d ring hangers
*finish may vary
3132 MSRP $1,320

C

C **GORDON MIRROR**
Oxidized Iron Clad/Burnt Waxed Wood/Beveled Mirror
30" Dia x D: 2.5"
76 Dia x D: 6 cm
*security cleat
*finish may vary
2657 MSRP $690

D **KENSEY SMALL WALL PLAQUE**
Burnt Iron
12.5" Dia x D: 1.5"
32 Dia x D: 4 cm
*mounting bracket
*finish may vary
3146 MSRP $165

E **KENSEY MEDIUM PLAQUE**
Burnt Iron
18" Dia x D: 2"
46 Dia x D: 5 cm
*mounting bracket
*finish may vary
3147 MSRP $255

F **KENSEY LARGE WALL PLAQUE**
Burnt Iron
25" Dia x D: 2.5"
64 Dia x D: 6 cm
*mounting bracket
*finish may vary
3148 MSRP $315

E

D

F

90% in stock, ships in 72 hours

A

B

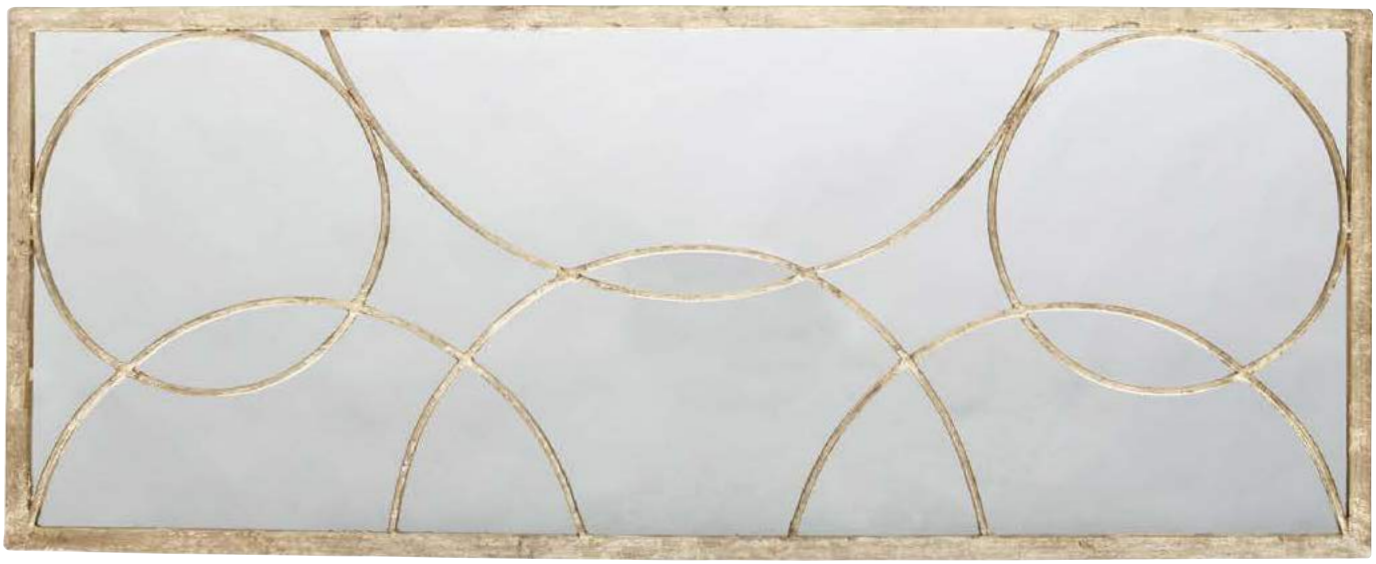

C

D

D

A **NIKITA MIRROR**
Silver Leafed Iron/Plain Mirror
H: 45" x W: 18" x D: 1"
H: 114 x W: 46 x D: 3 cm
*keyhole hanger - vertical or horizontal
*finish may vary
2352 MSRP $570

B **NIKITA MIRROR**
Gold Leafed Iron/Plain Mirror
H: 45" x W: 18" x D: 1"
H: 114 x W: 46 x D: 3 cm
*keyhole hanger - vertical or horizontal
*finish may vary
2008 MSRP $645

C **AGATHA SCONCE**
Antiqued Gold Leafed Iron/Antiqued Mirror
H: 20" x W: 9" x D: 3.5"
H: 51 x W: 23 x D: 9 cm
*sawtooth hanger
*finish may vary
4280 MSRP $315

D **AGATHA SCONCE**
Champagne Leafed Iron/Antiqued Mirror
H: 20" x W: 9" x D: 3.5"
H: 51 x W: 23 x D: 9 cm
*sawtooth hanger
*finish may vary
2709 MSRP $315

E **DEGAN SMALL SCONCE**
Burnt Wax Iron/Clear Glass
H: 16" x W: 7" x D: 9"
H: 41 x W: 18 x D: 23 cm
*wall mount screws included
6158 MSRP $300

F WINDSOR SMITH COLLECTION
VESTA WALL SHELF
Gray Lacquered Resin/Clear Acrylic
H: 15.5" x W: 12.5" x D: 8.5"
H: 39 x W: 32 x D: 22 cm
*keyhole hanger
DS9014 MSRP $825

G **DEGAN LARGE SCONCE**
Burnt Wax Iron/Clear Glass
H: 18" x W: 9" x D: 10"
H: 46 x W: 23 x D: 25 cm
*wall mount screws included
6159 MSRP $480

E

F

G

G

ALTERNATE VIEW

A **OCTAVIA LARGE PLAQUE**
Antique Silver Clad
45" Dia x D: 3"
114 Dia x D: 8 cm
*sawtooth hanger
6579 MSRP $1,215

B **OCTAVIA SMALL WALL PLAQUE**
Antique Silver Clad
30" Dia x D: 4.5"
76 Dia x D: 12 cm
*sawtooth hanger
6580 MSRP $900

C **APOLLO MEDIUM PLAQUE**
Metallic Gold Clad
18" Dia x D: 2.5"
46 Dia x D: 6 cm
*sawtooth hanger
2662 MSRP $300

D **APOLLO LARGE PLAQUE**
Metallic Gold Clad
24" Dia x D: 1.5"
61 Dia x D: 4 cm
*sawtooth hanger
2661 MSRP $390

E **APOLLO SMALL PLAQUE**
Metallic Gold Clad
12" Dia x D: 3.5"
30 Dia x D: 9 cm
*sawtooth hanger
2663 MSRP $210

F **EDWIN TREE WALL SCULPTURE**
Polished Nickel
H: 22" x W: 28" x D: 2.5"
H: 56 x W: 71 x D: 6 cm
*mounting bracket
2625 MSRP $270

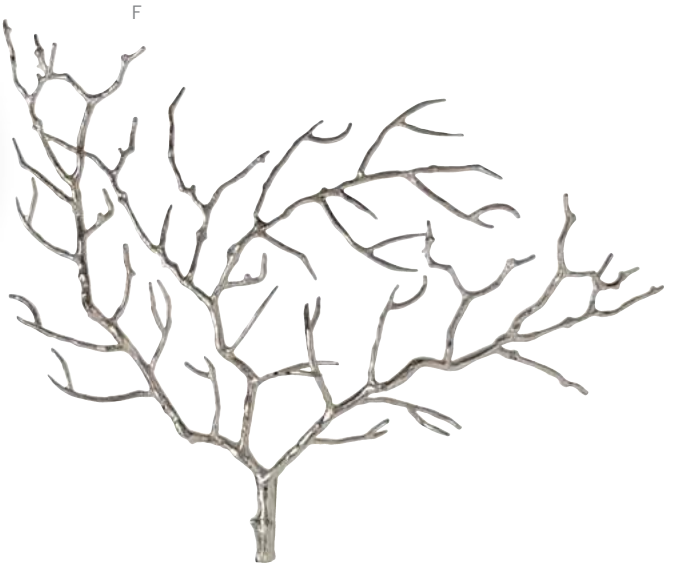

G

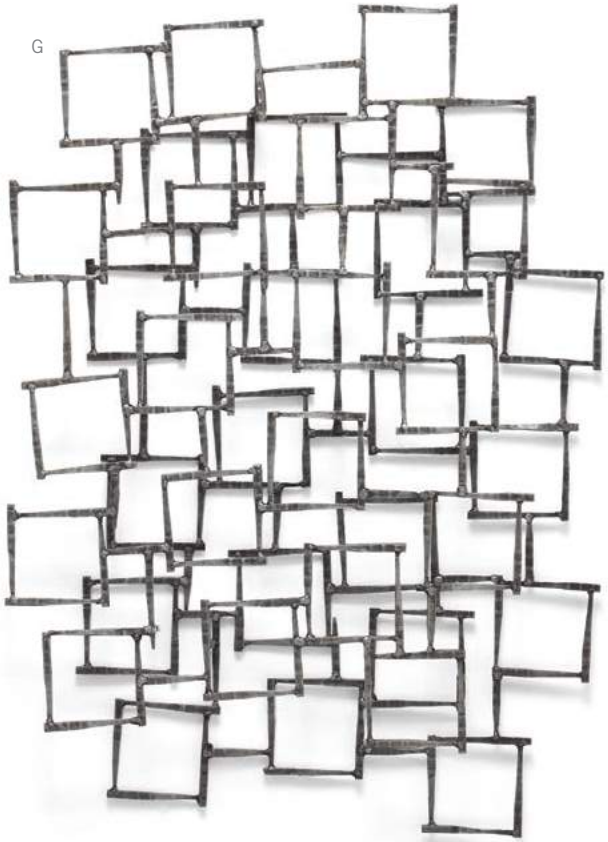

H

I

G **ECKO WALL SCULPTURE**
Natural Iron
H: 34" x W: 25" x D: 3.5"
H: 86 x W: 64 x D: 9 cm
*hangs from frame - vertical or horizontal
6799 MSRP $525

H **ECKO WALL SCULPTURE**
Natural Iron/Brass Welds
H: 34" x W: 25" x D: 3.5"
H: 86 x W: 64 x D: 9 cm
*hangs from frame - vertical or horizontal
6347 MSRP $525

I **ERICA WALL SCULPTURE**
Antique Brass
H: 33" x W: 47" x D: 5"
H: 84 x W: 119 x D: 13 cm
*keyhole hanger
6235 MSRP $1,050

90

PERCENT IN-STOCK

Ships within 72 hours

ACCESSORIES

Our accessory assortment isn't just about filling an empty space. We are totally committed to artisan techniques, classic forms, current trends and a pledge to keep things fresh. We do offer the beautiful and the practical, but also enjoy the unfamiliar and unique – we believe that this category allows you to have fun with subject matter, scale and finish.

A WINDSOR SMITH COLLECTION
DAPHNE CANDLE HOLDER
White Gesso/Gold Leaf
H: 21" x W: 21.5" x D: 14"
H: 53 x W: 55 x D: 36 cm
*finish may vary
DS2017 MSRP $600

B **VENUS SHORT VASE**
Matte White/Gold Porcelain
H: 9.5" x 12.5" Dia
H: 24 x 32 Dia cm
7666 MSRP $210

C **SERENA LARGE SCULPTURE**
Gold Leafed Iron
9" Dia
23 Dia cm
4174 MSRP $210

D **SERENA SMALL SCULPTURE**
Gold Leafed Iron
7" Dia
18 Dia cm
4175 MSRP $150

B

C

D

E

E BARRY DIXON COLLECTION
JENSEN MAGNIFYING OBJECT
Gold Leafed Aluminum
H: 12" x W: 7" x D: 10"
H: 30 x W: 18 x D: 25 cm
DD2070 MSRP $330

F

F **VENUS TALL VASE**
Matte White/Gold Porcelain
H: 15" x 4" Dia
H: 38 x 10 Dia cm
7665 MSRP $150

A **LAME' VASES, SET OF 3**
Gold Leaf/Black Lacquered Porcelain
H: 5.5" - 11.5" x 5" - 10.5" Dia
H: 14 - 29 x 13 - 27 Dia cm
7713 MSRP $420

A

B **VANESSA CENTERPIECES, SET OF 2**
Metallic Champagne/Gold/Black Porcelain
H: 5" x W: 13" x D: 5.5"
H: 6.5" x W: 11" x D: 6"
H: 13 x W: 33 x D: 14 cm
H: 17 x W: 28 x D: 15 cm
*finish may vary
7676 MSRP $165

B

C

C **PIEDMONT VASE**
Gold Porcelain
H: 7.5" x W: 6.5" x D: 6.5"
H: 19 x W: 17 x D: 17 cm
7727 MSRP $180

ALTERNATE VIEW

D

ALTERNATE VIEW

D WINDSOR SMITH COLLECTION
POMONA CONTAINER
Distressed Gold Porcelain
H: 9.5" x 6" Dia
H: 24 x 15 Dia cm
DS7006 MSRP $150

90% in stock, ships in 72 hours

A

B

C

A WINDSOR SMITH COLLECTION
GALATEA URN
Faux Marble Resin
H: 29.5" x 13.5" Dia
H: 75 x 34 Dia cm
DS9013 MSRP $1,080

B WINDSOR SMITH COLLECTION
PYGMALION STAND
Antique Brass/White Marble
H:42" x 20" Sq
H: 107 x 51 Sq cm
*marble may vary
DS9012 MSRP $2,100

C WINDSOR SMITH COLLECTION
LARISSA URN
Faux Marble Resin
H: 15" x W: 10.5" x D: 7"
H: 38 x W: 27 x D: 18 cm
DS9005 MSRP $375

D WINDSOR SMITH COLLECTION
JULIUS VASE
Blue/Clear Glass
H: 13" x 16" Dia
H: 33 x 41 Dia cm
DS7001 MSRP $525

D

E WINDSOR SMITH COLLECTION
ALEXANDROS CENTERPIECE
Polished Brass
H: 10" x W: 22.5" x D: 8.5"
H: 25 x W: 57 x D: 22 cm
DS2018 MSRP $1,350

E

F

G

F WINDSOR SMITH COLLECTION
RAMSES BANK
Polished Nickel/Polished Brass
H: 13.5" x 16" Tri
H: 34 x 41 cm Tri
DS2014 MSRP $1,200

G WINDSOR SMITH COLLECTION
CHANGO HURRICANE
Gold Leafed Iron/Seedy Glass
H: 14" x 14.5" Dia
H: 36 x 37 Dia cm
*finish may vary
DS2016 MSRP $855

A **OMARI SMALL SCULPTURE**
Gold Leafed Metal/Natural Agate/
Clear Acrylic
H: 9" x W: 6.5" X D: 4"
H: 23 x W: 17 x D: 10 cm
*finish may vary
9111 MSRP $240

B **OMARI LARGE SCULPTURE**
Gold Leafed Metal/Natural Agate/
Clear Acrylic
H: 14.5" x W: 10.5" x D: 4"
H: 37 x W: 27 x D: 10 cm
*finish may vary
9113 MSRP $300

C **OMARI MEDIUM SCULPTURE**
Gold Leafed Metal/Natural Agate/
Clear Acrylic
H: 11.5" x W: 8" x D: 4"
H: 29 x W: 20 x D: 10 cm
*finish may vary
9112 MSRP $270

D **FERGIE SCULPTURES SET OF 3**
Agates/Black Resin Stand
H: 8" - 11.5" x W: 6" x D: 2"
H: 20 - 29 x W: 15 x D: 5 cm
*finish and size may vary
9653 MSRP $465

E **BANYAN SCULPTURES, SET OF 3**
Copper Iron/Black Iron
H: 9.5" - 16.5" x W: 4.5" - 14" x D: 2" - 3"
H: 24 - 42 x W: 11 - 36 x D: 5 - 8 cm
9621 MSRP $420

E

F **FLORENCE SCULPTURES, SET OF 5**
Agate/Bronze Metal Stand
H: 8" - 15" x W: 5" - 6" x D: 3"
H: 20 - 38 cm x W: 13 - 15 cm x D: 8 cm
*finish and size may vary
9999 MSRP $750

F

A **GEORDI LARGE SCULPTURE**
Navy Lacquered Resin/Vintage Silver
H: 23″ x W: 13″ x D: 10″
H: 58 x W: 33 x D: 25 cm
9001 MSRP $360

B **GEORDI SMALL SCULPTURE**
White Lacquered Resin/Polished Brass
H: 16.5″ x W: 9″ x D: 7″
H: 42 x W: 23 x D: 18 cm
9105 MSRP $270

C **GEORDI LARGE SCULPTURE**
White Lacquered Resin/Polished Brass
H: 23″ x W: 13″ x D: 10″
H: 58 x W: 33 x D: 25 cm
9108 MSRP $360

D **GEORDI SMALL SCULPTURE**
Citron Lacquered Resin/Polished Brass
H: 16.5″ x W: 9″ x D: 7″
H: 42 x W: 23 x D: 18 cm
9107 MSRP $270

E **GEORDI LARGE SCULPTURE**
Red Lacquered Resin/Polished Brass
H: 23″ x W: 13″ x D: 10″
H: 58 x W: 33 x D: 25 cm
9109 MSRP $360

F LAURA KIRAR COLLECTION
LARGE DOVES, SET OF 3
Clear Glass
H: 5.5" x W: 3.5" x D: 8"
H: 14 x W: 9 x D: 20 cm
DK7023 MSRP $270

F

G

G **HYDE SMALL SCULPTURE**
Vintage Brass
H: 21.5" x W: 9.5" x D: 6"
H: 55 x W: 24 x D: 15 cm
6393 MSRP $195

H **ELMIRA SCULPTURES, SET OF 3**
Polished Brass
H: 4" - 6" x W: 6" - 6.5" x D: 6" - 6.5"
H: 10 - 15 x W: 15 - 17 x D: 15 - 17 cm
4098 MSRP $360

H

A

B

A WINDSOR SMITH COLLECTION
LYKOS VASE
Satin White
H: 28.5″ x 7″ Sq
H: 72 x 18 cm Sq
DS7009 MSRP $345

B **SANSA LARGE TRAY**
Frosted Glass
H: 2.5″ x 12.5″ Dia
H: 6 x 32 Dia cm
*finish may vary
7738 MSRP $150

C WINDSOR SMITH COLLECTION
CHUKU VASE
Satin White
H: 6.5″ x W: 18″ x D: 5″
H: 17 x W: 46 x D: 13 cm
DS7005 MSRP $225

C

D **ROBERTSON TALL VASE**
Ivory Crackle Porcelain
H: 11.5″ x 5″ Dia
H: 29 x 13 Dia cm
*finish may vary
7714 MSRP $120

E **ROBERTSON SHORT VASE**
Ivory Crackle Porcelain
H: 5.5″ x 6.5″ Dia
H: 14 x 17 Dia cm
*finish may vary
7715 MSRP $60

F WINDSOR SMITH COLLECTION
FLORA VASE
White Marble
8″ Sq x D: 3″
20 Sq x D: 8 cm
*marble may vary
DS2008 MSRP $345

D

E

F

A

B
C

D

E

F

A **KIRBY VASES, SET OF 3**
Antique Brass
H: 4.5" - 9.5" x W: 3.5" - 4.5" x D: 2.5"
H: 11 - 24 x W: 9 - 11 x D: 6 cm
6423 MSRP $285

B **GIGI SMALL VASE**
Antique Vase
H: 8.5" x 5.5" Dia
H: 22 x 14 Dia cm
4144 MSRP $135

C **GIGI LARGE VASE**
Antique Brass
H: 10.5" x 7" Dia
H: 27 x 18 Dia cm
4145 MSRP $195

D WINDSOR SMITH COLLECTION
KOS VASE
Antique Brass
H: 11" x Adj. W: 3.5" - 16.5" x Adj. D: 1.5" - 8"
H: 28 x Adj. W: 9 - 42 x Adj. D: 4 - 20 cm
DS2007 MSRP $525

E **DAKOTA VASES, SET OF 3**
Antique Brass
H: 6" x W: 8.5" x D: 4" ea
H: 16 x W: 22 x D: 10 cm ea
2655 MSRP $360

G **JORDAN VASE**
Antique Brass
H: 9" x W: 12" x D: 12"
H: 23 x W: 30 x D: 30 cm
6425 MSRP $210

F **DELANEY VASE**
Antique Brass
H: 6.5" x W: 11" x D: 3"
H: 17 x W: 28 x D: 8 cm
2656 MSRP $600

G

A

A **KIMO CONTAINER**
Antique Brass Foil Clad
H: 8" x 12" Dia
H: 20 x 30 Dia cm
*finish and clad may vary
6362 MSRP $600

B

B **MALVA CENTERPIECE**
Gunmetal/Gold Drip Porcelain
H: 8" x W: 16" x D: 7.5"
H: 20 x W: 41 x D: 19 cm
*finish may vary
7707 MSRP $210

C

C **MALVA VASES, SET OF 2**
Gunmetal/Gold Drip Porcelain
H: 8.5" x 5.5" Dia
H: 6" x 5.5" Dia
H: 22 x 14 Dia cm
H: 15 x 14 Dia cm
*finish may vary
7690 MSRP $150

D

D **ALMA CONTAINER**
Matte Gold Porcelain
H: 8" x W: 10" x D: 7"
H: 20 x W: 25 x D: 18 cm
7987 MSRP $180

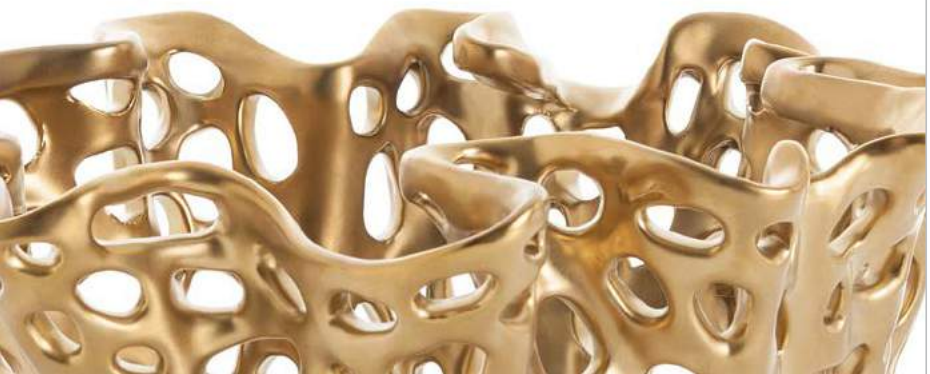

A

B

C

A **NYLA SCULPTURE**
Distressed Aluminum
H: 11″ x W: 15″ x D: 13.5″
H: 28 W: 38 x D: 34 cm
2852 MSRP $600

B **PATRICE SCULPTURE**
Natural Iron
H: 12″ x W: 13.5″ x D: 11.5″
H: 30 x W: 34 x D: 29 cm
3136 MSRP $480

C **LILLY SCULPTURE**
Smoke/Amethyst Swirl Glass/Crystal
H:15″ x W: 13″ x D: 6″
H: 38 x W: 33 x D: 15 cm
*size and finish may vary
7183 MSRP $1,050

D

E

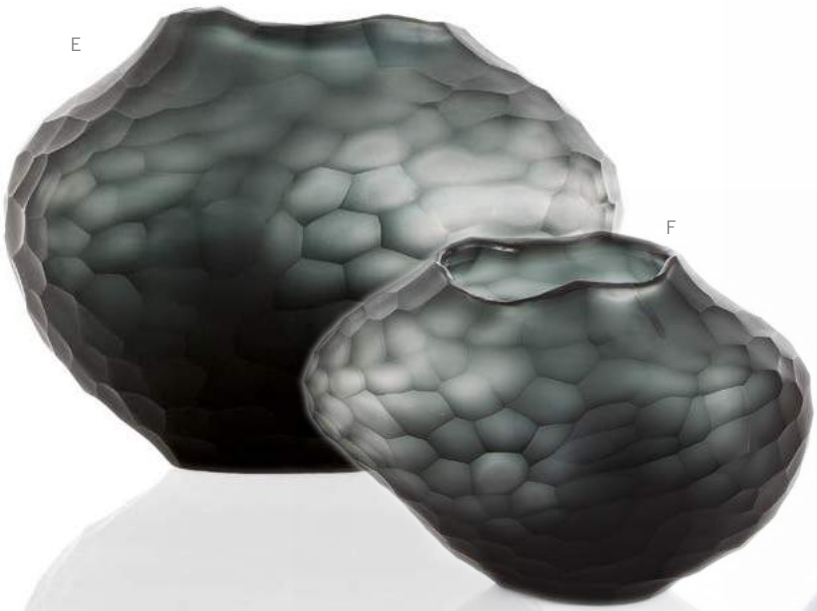

F

G

D WINDSOR SMITH COLLECTION
PLINY CENTERPIECE
Smoke Etched Glass
H: 11″ x 14″ Dia
H: 28 x 36 Dia cm
DS7000 MSRP $720

E **ALDO LARGE VASE**
Smoke Etched Glass
H: 8.5″ x W: 11″ x D: 8″
H: 22 x W: 28 x D: 20 cm
*finish may vary
7038 MSRP $300

F **ALDO SMALL VASE**
Smoke Etched Glass
H: 7″ x W: 8.5″ x D: 6″
H: 18 x W: 22 x D: 15 cm
*finish may vary
7039 MSRP $150

G WINDSOR SMITH COLLECTION
LEDA VASE
Smoke Cased Glass
H: 21″ x 7.5″ Dia
H: 53 x 19 Dia cm
DS7008 MSRP $240

A LAURA KIRAR COLLECTION
MARBLED VASE
Black Antiqued Mercury Glass
H: 10" x 9.5" Dia
H: 25 x 24 Dia cm
*finish may vary
DK6018 MSRP $255

A

B **CYD LARGE BOWL**
Distressed Mercury Glass
H: 8" x 13.5" Dia
H: 20 x 34 Dia cm
*finish may vary
2408 MSRP $300

B

C **LAME VASES, SET OF 3**
Silver Leaf/Black Lacquered Porcelain
H: 5.5" - 11.5" x 5" - 10.5" Dia
H: 14 - 29 x 13 - 27 Dia cm
7104 MSRP $420

D **BLYTHE LARGE DECANTERS**
Antique Silver Glass
H: 7.5" - 10" x 4" - 6" Dia
H: 19 - 25 cm x 10 - 15 Dia cm
*finish may vary
2516 MSRP $435

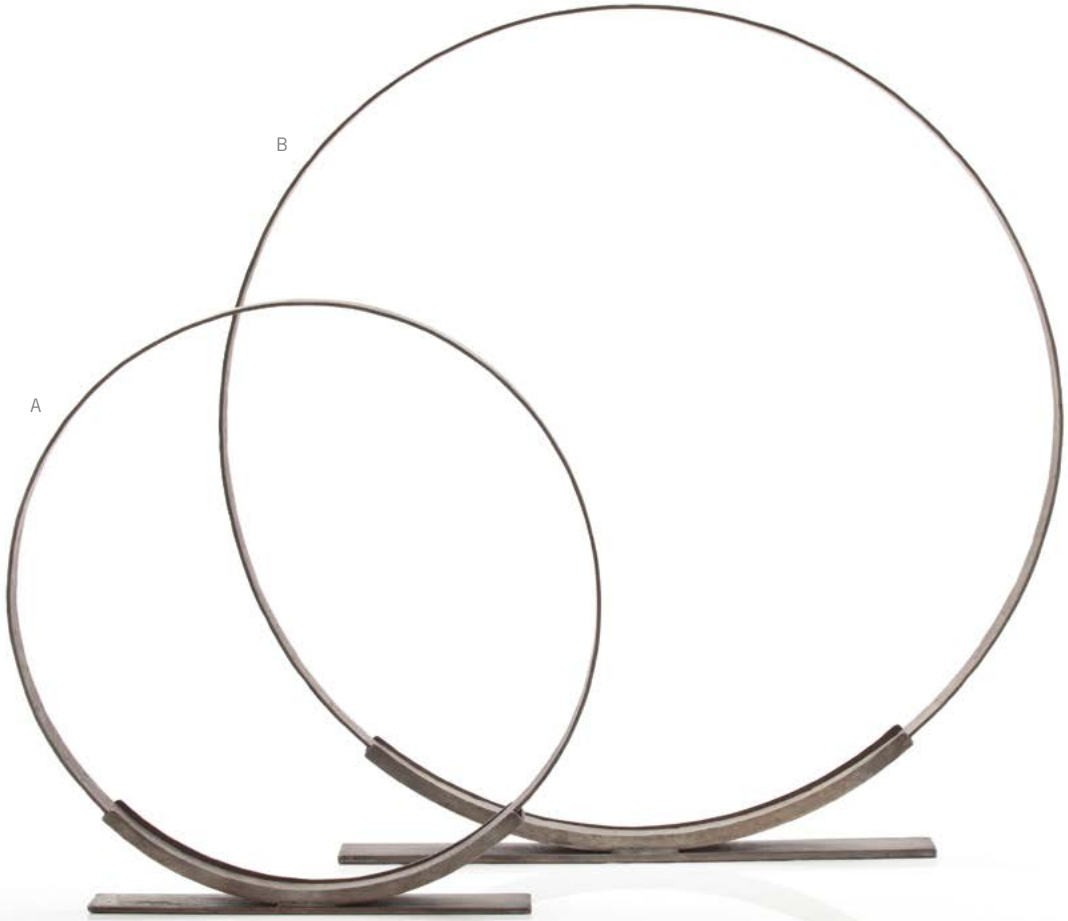

A **KOBE SMALL SCULPTURE**
Zinc
H: 25″ x W: 24.5″ x D: 2″
H: 64 x W: 62 x D: 5 cm
6436 MSRP $435

B **KOBE LARGE SCULPTURE**
Zinc
H: 37″ x W: 36.5″ x D: 2″
H: 94 x W: 93 x D: 5 cm
6435 MSRP $660

C **GREGORY LARGE RING SCULPTURE**
Polished Brass/Black Iron
H: 38.5″ x W: 36″ x D: 3″
H: 98 x W: 91 x D: 8 cm
4143 MSRP $630

D **GREGORY SMALL RING SCULPTURE**
Polished Brass/Black Iron
H: 27″ x W: 24″ x D: 3″
H: 69 x W: 61 x D: 8 cm
4142 MSRP $450

E

E **FAUST SCULPTURE**
Polished Brass/Natural Iron
Brass Welds
H: 21″ x W: 21″ x D: 3.5″
H: 53 x W: 53 x D: 9 cm
*finish may vary
2690 MSRP $1,200

F **DARCY TABLE MIRROR**
Natural Iron/Polished Brass/Convex Mirror
H: 25.5″ x W: 20″ x D: 8″
H: 65 x W: 51 x D: 20 cm
2608 MSRP $2,100

F

G

G **DARCY FLOOR MIRROR**
Natural Iron/Polished Brass/
Convex Mirror
Adj H: 57.5″ - 66.5″ x W: 25″x D: 17″
Adj H: 146 - 169 x W: 64 x D: 43 cm
2639 MSRP $4,800

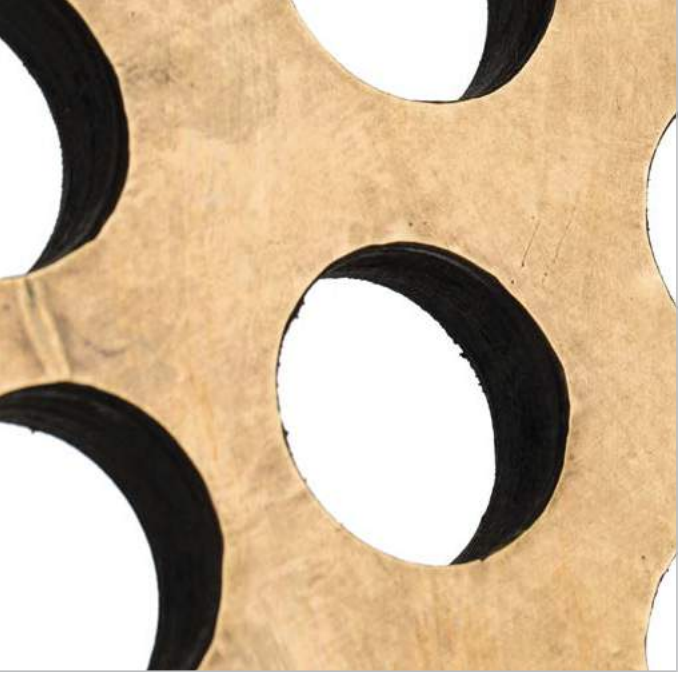

B

C

A

D

A BARRY DIXON COLLECTION
COPERNICUS ARMILLARY
Antique Brass
H: 33" x 20.5" Dia
H: 84 x 52 Dia cm
DD2063 MSRP $3,900

B **MAYFIELD LARGE SCULPTURE**
Antique Brass Clad/Blackened Iron
H: 29" x W: 25" x D: 4"
H: 74 x W: 64 x D: 10 cm
*clad may vary
4088 MSRP $570

C **MAYFIELD SMALL SCULPTURE**
Antique Brass Clad/Blackened Iron
H: 21" x W: 12.5" x D: 4"
H: 53 x W: 32 x D: 10 cm
*clad may vary
4086 MSRP $330

D **MAYFIELD MEDIUM SCULPTURE**
Antique Brass Clad/Blackened Iron
H: 23" x W:16.5" x D: 4"
H: 58 x W: 42 x D: 10 cm
*clad may vary
4087 MSRP $390

E **NEO SCULPTURE**
Natural Iron/Brass Weld
H: 28.5" x W: 28" x D: 6"
H: 72 x W: 71 x D: 15 cm
4057 MSRP $600

F **NED SCULPTURE**
Distressed Bronze
24.5" Dia x D: 7"
62 Dia x D: 18 cm
2479 MSRP $780

E

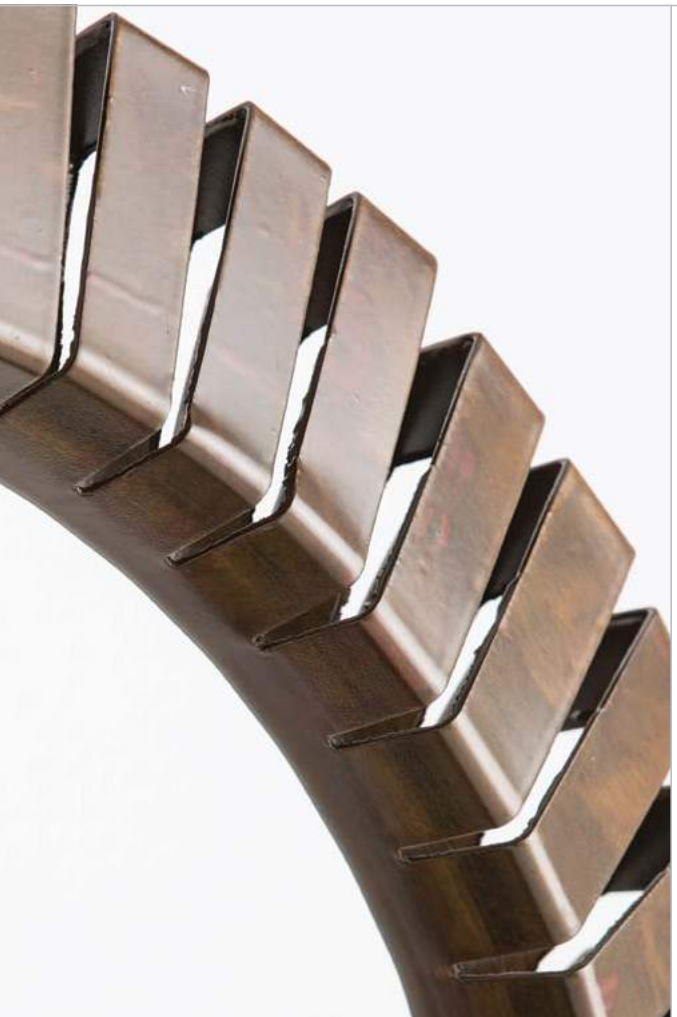

F

A

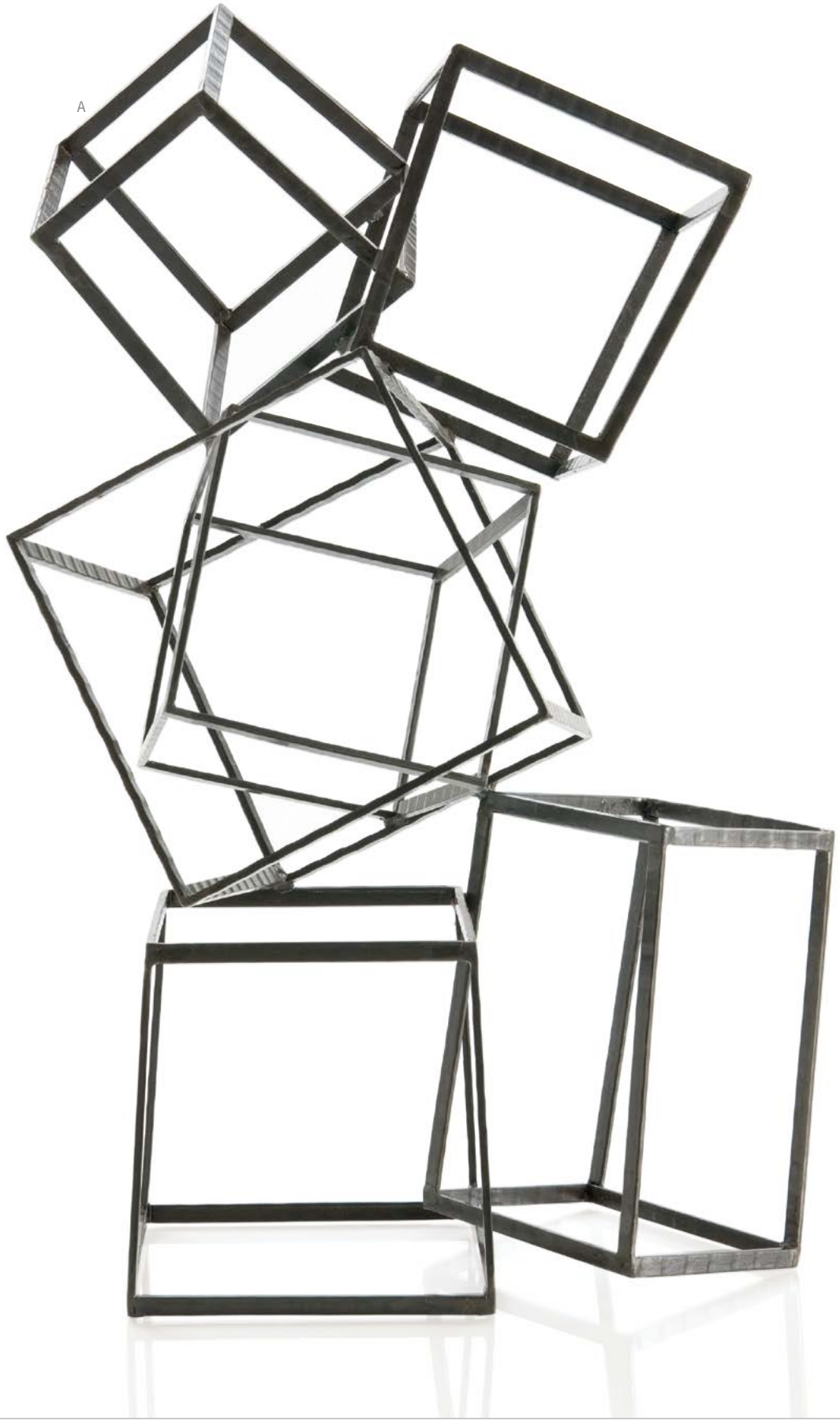

B

C

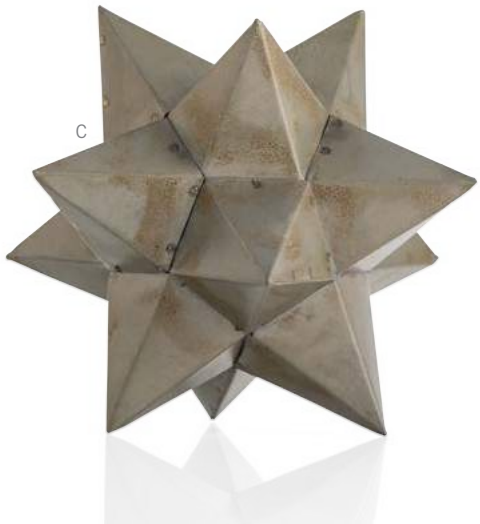

D

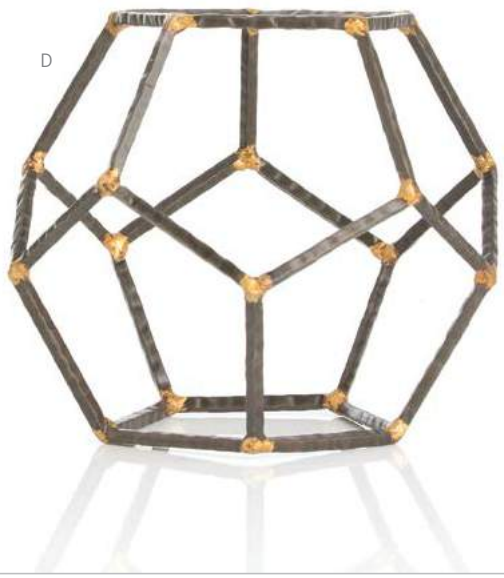

A **MONDRIAN SCULPTURE**
Natural Iron
H: 31.5″ x W: 21″ x D: 11″
H: 80 x W: 53 x D: 28 cm
6088 MSRP $495

B **DREA SMALL SCULPTURE**
Natural Iron/Brass Welds
6.5″ Dia
17 Dia cm
4066 MSRP $90

C **DIDO SMALL SCULPTURE**
Distressed Zinc
7″ Dia
18 Dia cm
4069 MSRP $120

D **HARMON LARGE ACCESSORY**
Natural Iron/Brass Welds
H: 11.5″ x 14″ Dia
H: 29 x 36 Dia cm
4313 MSRP $180

E **DONNELLY SCULPTURE**
Antique Brass
H: 17" x W: 24" x D: 14"
H: 43 x W: 61 x D: 36 cm
2651 MSRP $540

E

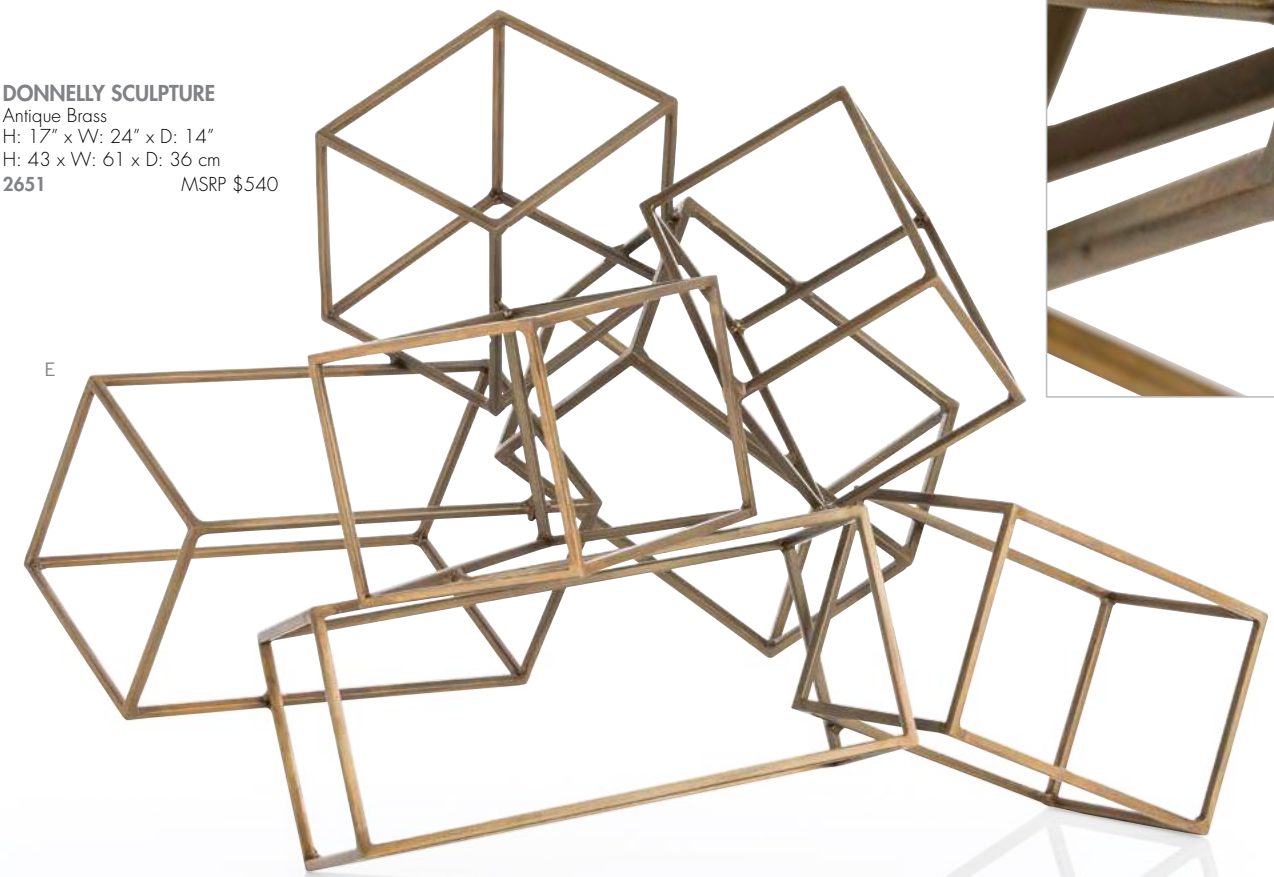

F

F **MCCOY SCULPTURES, SET OF 3**
Antique Brass
6" Sq /8" Sq /10" Sq
15 cm Sq /20 cm Sq /25 cm Sq
6369 MSRP $210

ALTERNATE VIEWS

A

A **STOCKTON SCULPTURE**
Dark Natural Iron
H: 15" x W: 12" x D: 7.5"
H: 38 x W: 30 x D: 19 cm
2605 MSRP $360

B **DUKE SCULPTURE**
Antique Brass
H: 16" x W: 14" x D: 7"
H: 41 x W: 36 x D: 18 cm
6126 MSRP $300

C **EDAN SCULPTURE**
Vintage Brass/Black Marble
H: 19.5" x W: 9" x D: 7.5"
H: 50 x W: 23 x D: 19 cm
*marble may vary
4028 MSRP $540

B

C

D

E

D **CAI SCULPTURE**
Natural Iron/Brass Welds/White Marble
H: 31.5" x W: 8" x D: 6.5"
H: 80 x W: 20 x D: 17 cm
*finish may vary
3109 MSRP $645

E **HENLEY SCULPTURE**
Vintage Brass/White Marble
H: 26" x W: 12" x D: 8"
H: 66 x W: 30 x D: 20 cm
*marble may vary
3125 MSRP $750

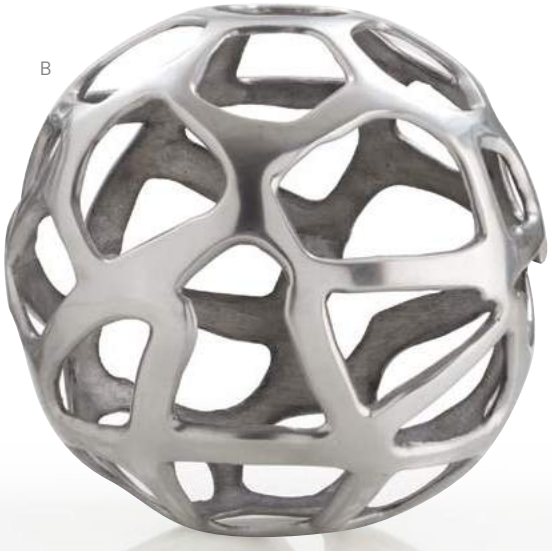

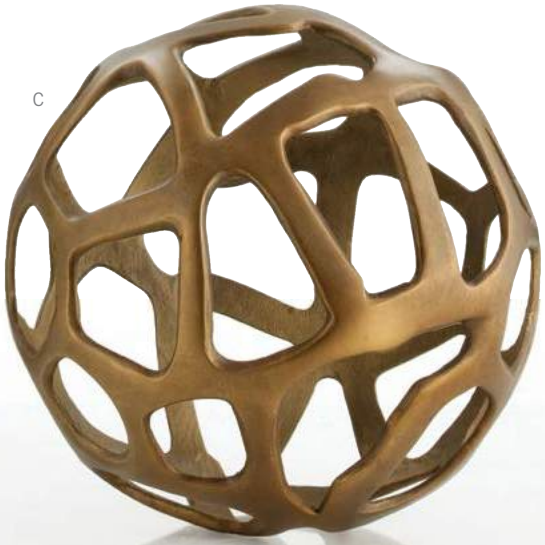

A **ROWENA SCULPTURE**
Distressed Aluminum
H: 14.5" x W: 7.5" x D: 5"
H: 37 x W: 19 x D: 13 cm
*finish may vary
2011 MSRP $570

B **ENNIS LARGE SPHERE**
Polished Nickel
13.5"Dia
34 Dia cm
2726 MSRP $390

C **ENNIS LARGE SPHERE**
Antique Brass
13.5" Dia
34 Dia cm
2694 MSRP $390

D **GIA LARGE SCULPTURE**
Natural Iron
H: 5" x W: 14" x D: 8.5"
H: 13 x W: 36 x D:22 cm
*finish may vary
3017 MSRP $150

D

E **KIEV SCULPTURE**
White Marble/Distressed Black Iron
H: 16.5" x W: 10" x D: 3.5"
H: 42 x W: 25 x D: 9 cm
*marble may vary
6421 MSRP $390

E

F

G

F **KEONI SCULPTURE**
White Marble/Distressed Black Iron
H: 12" x W: 8" x D: 3.5"
H: 30 x W: 20 x D: 9 cm
*marble may vary
6420 MSRP $300

G **KIP SCULPTURE**
White Marble/Distressed Black Iron
H: 19.5" x W: 12" x D: 3.5"
H: 50 x W: 30 x D: 9 cm
*marble may vary
6422 MSRP $450

I

H

ACCESSORIES

H **JACK LARGE SCULPTURE**
Antique Nickel
H: 7.5" x W: 11" x D: 9"
H: 19 x W: 28 x D: 23 cm
2043 MSRP $300

I **GARRICK SCULPTURE**
Bronze/Black Marble
H: 12" x W: 11" x D: 9"
H: 30 x W: 28 x D: 23 cm
*marble may vary
3016 MSRP $750

A

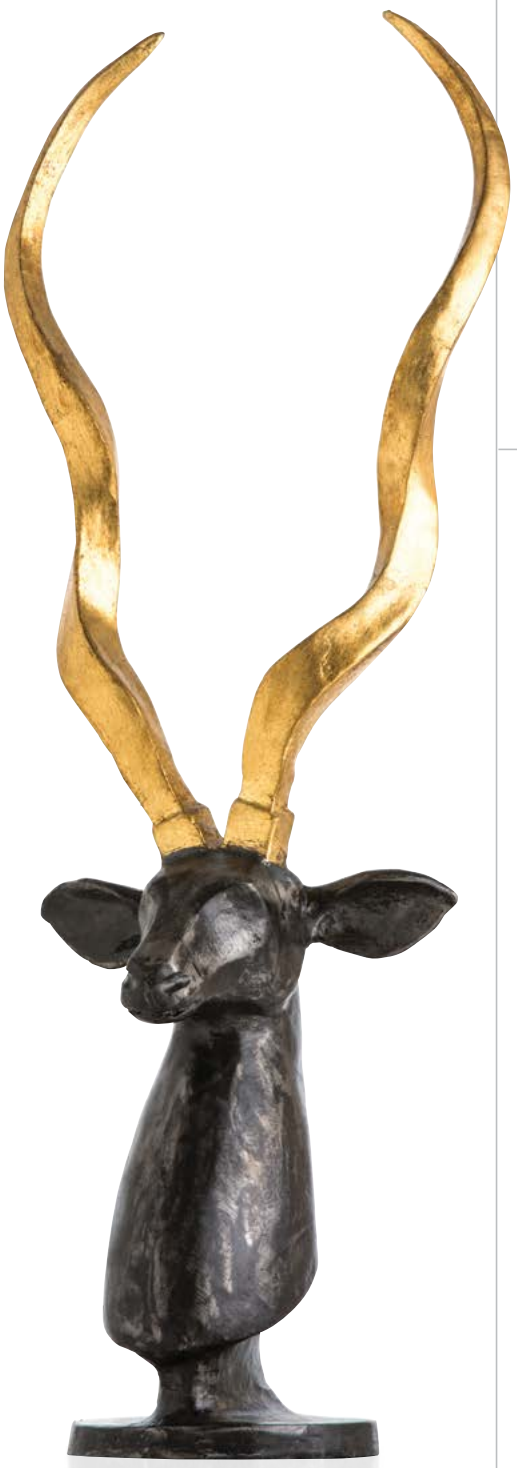

B

C

D

E

A **GARETH SCULPTURE**
Natural Iron/Gold Leafed Iron
H: 23" x W: 7.5" x D: 6"
H: 58 x W: 19 x D: 15 cm
*finish may vary
3012 MSRP $540

B **BERNARD HORNS, SET OF 3**
Natural Horn/Polished Nickel
H: 12" - 17" x W: 2.5" - 4" x D: 2.5" - 4"
H: 31 - 43 x W: 6 - 10 x D: 6 - 10 cm
*finish and size of horns may vary
6323 MSRP $345

C **IGNACIO HORNS, SET OF 2**
Natural Horn/Polished Brass
H: 16" x W: 9" x D: 4"
H: 21.5" x W: 7.5" x D: 5"
H: 41 x W: 23 x D: 10 cm
H: 55 x W: 19 x D: 13 cm
*finish and size of horns may vary
4299 MSRP $420

D **TEJAS SCULPTURE**
Natural Iron/Black Granite
H: 20" x W: 23.5" x D: 12"
H: 51 x W: 60 x D: 30 cm
*granite may vary
3000 MSRP $690

E **STEAD SCULPTURE**
Natural Horn/Polished Brass
H: 25" x W: 11" x D: 5"
H: 64 x W: 28 x D: 13 cm
*finish and size of horn may vary
6023 MSRP $3

A

B

A **KAZU LARGE SCULPTURE**
Natural Driftwood/Dark Natural Iron
H: 42.5" x W: 28" x D: 14"
H: 108 x W: 71 x D: 36 cm
*finish and size may vary up to 10"
5414 MSRP $840

B **NANTUCKET BOWL**
Driftwood
H: 16" x 25" Dia
H: 41 x 64 Dia cm
*finish and size may vary up to 10"
5410 MSRP $600

C **KAZU FLOOR SCULPTURE**
Natural Driftwood/Dark Natural Iron
H: 76" x W: 42" x D: 18"
H: 193 x W: 107 x D: 46 cm
*finish and size may vary up to 18"
2422 MSRP $2,100

D **KAZU SMALL SCULPTURE**
Natural Driftwood/Dark Natural Iron
H: 23.5" x W: 26" x D: 14"
H: 60 x W: 66 x D: 36 cm
*finish and size may vary up to 10"
5415 MSRP $495

C

*variation shown 2422

D

A

A **TEMPLETON CENTERPIECE**
Gray Washed Wood/Burnt Wax Iron
H: 13.5" x 16" Dia
H: 34 x 41 Dia cm
4191 MSRP $540

B

B **HOLDEN SMALL SCULPTURE**
Natural Waxed Wood/Black Iron
H: 28.5" x W: 24" x D: 5"
H: 72 x W: 61 x D: 13 cm
*finish may vary
2736 MSRP $750

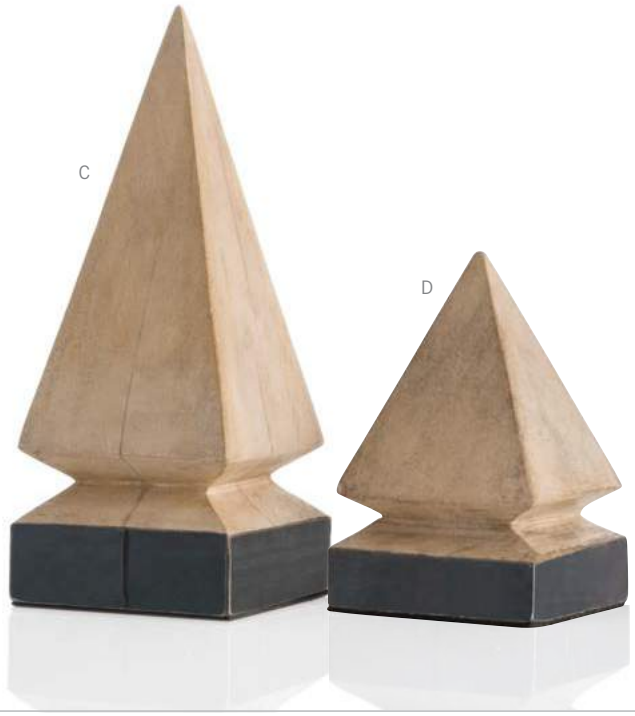

C **MELBOURNE LARGE SCULPTURE**
Natural Whitewashed Wood/Oxidized Iron Clad
H: 12" x 5" Sq
H: 30 x 13 Sq cm
4074 MSRP $135

D **MELBOURNE SMALL SCULPTURE**
Natural Whitewashed Wood/Oxidized Iron Clad
H: 6" x 4" Sq
H: 15 x 10 Sq cm
4073 MSRP $75

E **FOSSIL SCULPTURE**
Painted Iron/Black Marble
H: 15" x W: 12" x D: 3.5"
H: 38 x W: 30 x D: 9 cm
3236 MSRP $285

F **ELLA SCULPTURE**
Natural Waxed Wood/Black Iron
H: 24" x W: 19.5" x D: 5"
H: 61 x W: 50 x D: 13 cm
2748 MSRP $495

A

A BARRY DIXON COLLECTION
GEO SCULPTURES, SET OF 7
Ebony/Light Walnut/Natural Iron Base
H: 3.5" - 11.5" x W: 3" - 5.5" x D: 3" - 5.5"
H: 9 - 29 x W: 8 - 14 x D: 8 - 14 cm
*finish and size may vary
DD2021 MSRP $675

B

B **LEIGHTON SCULPTURE**
Polished Aluminum/Reclaimed Teak Wood
H: 12.5" x W: 11" x D: 6"
H: 32 x W: 28 x D: 15 cm
*finish may vary
6509 MSRP $345

C **DOYLE BOOKENDS, SET OF 2**
Polished Aluminum/Reclaimed Teak Wood
H: 12.5" x W: 7.5" x D: 4" ea
H: 32 x W: 19 x D: 10 cm ea
*finish may vary
6109 MSRP $420

D **FAULKNER BOOKENDS, SET OF 2**
Polished Stainless Steel
H: 6.5" x W: 6" x D: 4"
H: 17 x W: 15 x D: 10 cm
6122 MSRP $300

A **JACQUE BOOKENDS, SET OF 2**
Bronze
H: 6" x W: 11.5" x D: 3.5"
H: 15 x W: 29 x D: 9 cm
3127 MSRP $300

B **PILCHER BOOKENDS, PAIR**
Natural Iron
H: 5.5" x W: 6" x D: 3"
H: 14 x W: 15 x D: 8 cm
3139 MSRP $270

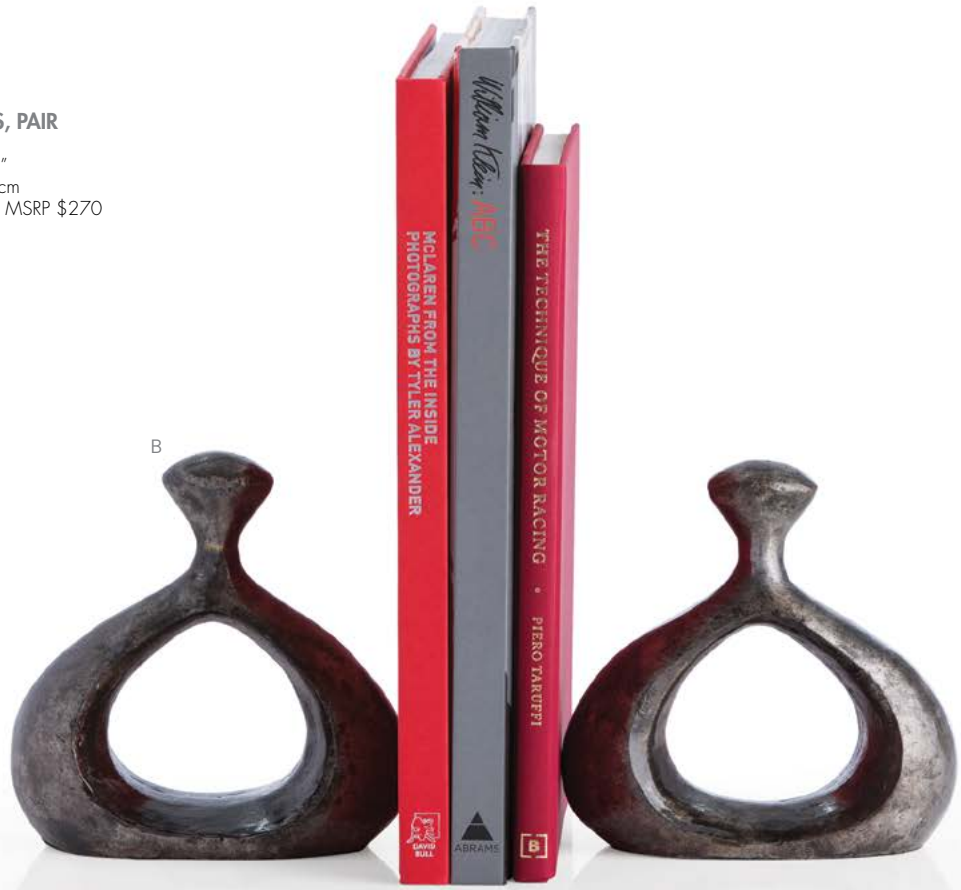

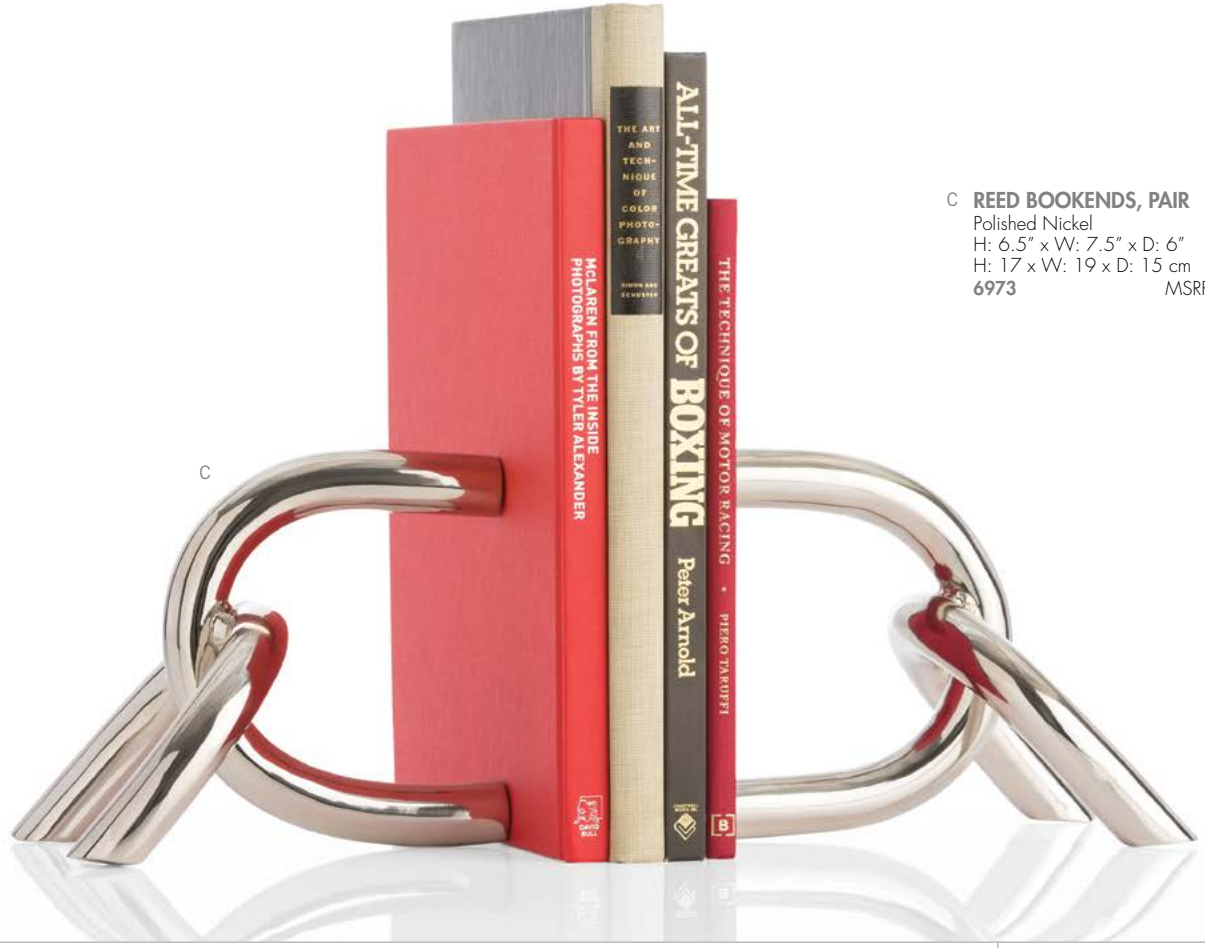

C **REED BOOKENDS, PAIR**
Polished Nickel
H: 6.5″ x W: 7.5″ x D: 6″
H: 17 x W: 19 x D: 15 cm
6973 MSRP $600

D **GAUGE BOOKENDS, PAIR**
Clear Glass/Polished Nickel
H: 6.5″ x W: 6″ x D: 6″
H: 17 x W: 15 x D: 15 cm
2695 MSRP $270

E

E **FILBERT SCULPTURE**
Bronze
H: 6″ x W: 6″ x D: 3″
H: 15 x W: 15 x D: 8 cm
2693 MSRP $240

90% in stock, ships in 72 hours

A **SHOOER DECANTER**
Antique Brass/Clear Glass
H: 12" x 7" Dia
H: 30 x 18 Dia cm
2674 MSRP $360

B **SCOOTER DECANTER**
Antique Brass/Clear Glass
H: 12" x 8" Dia
H: 30 x 20 Dia cm
2675 MSRP $360

C **SKIPPER DECANTER**
Antique Brass/Clear Glass
H: 16" x 7" Dia
H: 41 x 18 Dia cm
2676 MSRP $360

D **SKIPPER SCULPTURE**
Antique Brass
H: 4" x W: 9" x D: 4"
H: 10 x W: 23 x D: 10 cm
2250 MSRP $120

E **SCOOTER SCULPTURE**
Antique Brass
H: 2" x W: 8" x D: 7"
H: 5 x W: 20 x D: 18 cm
2251 MSRP $120

F **SHOOER SCULPTURE**
Antique Brass
H: 2" x W: 6.5" x D: 4.5"
H: 5 x W: 17 x D: 11 cm
2249 MSRP $120

G JAY JEFFERS COLLECTION
HOFFMAN TRAY
Cerused Oak/Antique Brass
H: 2" x W: 23" x D: 16"
H: 5 x W: 58 x D: 41 cm
DJ2026 MSRP $660

H JAY JEFFERS COLLECTION
JULES TRAY
Cerused Oak/Polished Brass
H: 2" x W: 23" x D: 16"
H: 5 x W: 58 x D: 41 cm
DJ2027 MSRP $525

I JAY JEFFERS COLLECTION
DUVAL BOX
Antique Brass/Polished Brass
H: 4.5" x W: 14" x D: 6"
H: 11 x W: 36 x D: 15 cm
DJ2015 MSRP $750

J JAY JEFFERS COLLECTION
GILLES ICE BUCKET
Cerused Oak/Antique Brass/
Stainless Steel Liner
H: 10" x 7.5" Dia
H: 25 x 19 Dia cm
DJ2030 MSRP $480

G

H

I

ALTERNATE VIEW

J

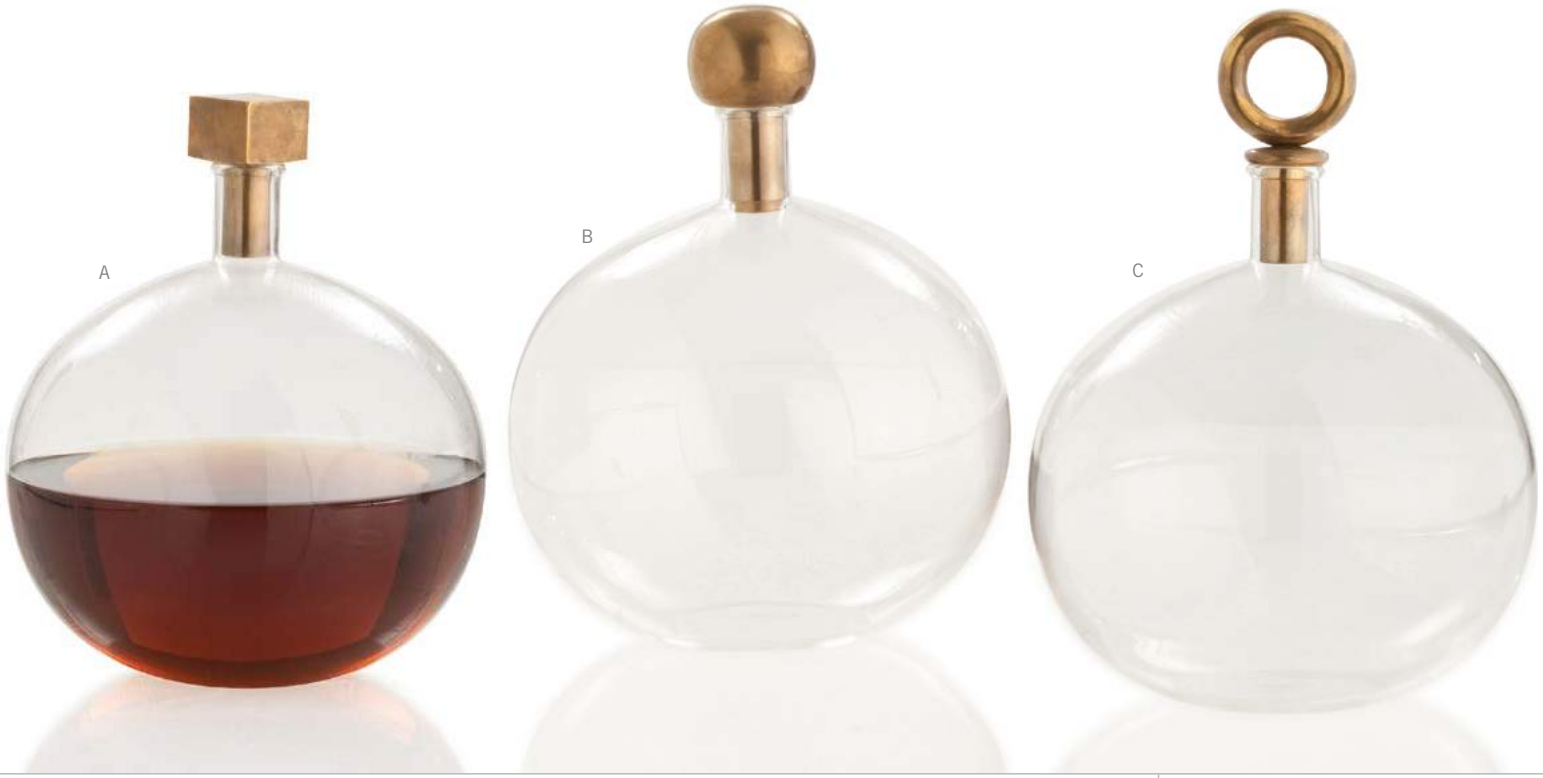

A **EDGAR CUBE STOPPER DECANTER**
Clear Glass/Antique Brass
H: 10.5" x 8" Dia
H: 27 x 20 Dia cm
2620 MSRP $225

B **EDGAR SPHERE STOPPER DECANTER**
Clear Glass/Antique Brass
H: 11" x 8" Dia
H: 28 x 20 Dia cm
2621 MSRP $225

C **EDGAR RING STOPPER DECANTER**
Clear Glass/Antique Brass
H: 12" x 8" Dia
H: 30 x 20 Dia cm
2622 MSRP $225

D **O'CONNOR DECANTERS, SET OF 3**
Smoke Glass
H: 10" -14" x 4" - 6" Dia
H: 25 - 36 x 13 - 15 Dia cm
7509 MSRP $450

E **EXTON NARROW TRAY**
White Marble/Antique Brass
H: 3" x W: 27" x D: 6"
H: 8 x W: 69 x D: 15 cm
*marble may vary
2312 MSRP $300

F **EXTON TRAY**
White Marble/Antique Brass
H: 3" x W: 22" x D: 15"
H: 8 x W: 56 x D: 38 cm
*marble may vary
2180 MSRP $540

G **CHARLES TRAY**
Antique Brass/Plain Mirror
H: 6" x W: 22" x D: 16"
H: 15 x W: 56 x D: 41 cm
2545 MSRP $375

H **BORDEAUX LARGE TRAY**
Antique Brass
H: 2" x W: 23.5" x D: 17.5"
H: 4 x W: 60 x D: 44 cm
4233 MSRP $660

A JAY JEFFERS COLLECTION
DIDI LARGE BOWL
Hammered Clear Glass/
Antique Brass
H: 5" x 6.5" Dia
H: 13 x 17 Dia cm
DJ2022 MSRP $120

B JAY JEFFERS COLLECTION
DIDI SMALL BOWL
Hammered Clear Glass/
Antique Brass
H: 3.5" x 4.5" Dia
H: 9 x 10 Dia cm
DJ2024 MSRP $60

C JAY JEFFERS COLLECTION
DIDI MEDIUM BOWL
Hammered Clear Glass/
Antique Brass
H: 4" x 5.5" Dia
H: 10 x 14 Dia cm
DJ2023 MSRP $90

D **GARRISON SMALL HURRICANE**
Clear Glass/Antique Brass
H: 11" x 8.5" Dia
H: 28 x 22 Dia cm
4367 MSRP $420

E **GARRISON LARGE HURRICANE**
Clear Glass/Antique Brass
H: 17" x 10" Dia
H: 43 x 25 Dia cm
4368 MSRP $600

F **THURMAN MEDIUM DECANTER**
Clear Glass/Light Terracotta Leather
H: 11" x 4.5" Dia
H: 28 x 11 Dia cm
*leather may vary
2741 MSRP $150

G **THURMAN SMALL DECANTER**
Clear Glass/Light Terracotta Leather
H:10" x 6" Dia
H: 25 x 15 Dia cm
*leather may vary
2743 MSRP $120

H **THURMAN LARGE DECANTER**
Clear Glass/Light Terracotta Leather
H: 14" x 4" Dia
H: 36 x 10 Dia cm
*leather may vary
2742 MSRP $180

I **DREXEL DECANTERS, SET OF 2**
Clear Glass/Antique Brass Chainmail
H: 10.5" x 4.5" Dia
H: 16" x 4.5" Dia
H: 27 x 11 Dia cm
H: 41 x 11 Dia cm
2614 MSRP $450

J **SYLVIE CLOCHE**
Antique Brass/White Marble
H: 13.5" x 10.5" Dia
H: 34 x 27 Dia cm
*marble may vary
4190 MSRP $420

A **RASHIDA CONTAINERS, SET OF 3**
Matte Brass/Polished Brass
H: 1.5" - 3" x 3" - 7" Dia
H: 4 - 8 x 8 - 18 Dia cm
2085 MSRP $420

B **MILLICENT SMALL CENTERPIECE**
Polished Nickel/Polished Brass Interior
H: 6.5" x W: 12" x D: 8.5"
H: 17 x W: 30 x D: 22 cm
6804 MSRP $300

C **MILLICENT LARGE CENTERPIECE**
Polished Nickel/Polished Brass Interior
H: 10" x W: 18" x D: 14"
H: 25 x W: 46 x D: 36 cm
6805 MSRP $570

D **PAIGE TRAY**
Matte Brass/Polished Brass
H: 3" x 14" Dia
H: 8 x 36 Dia cm
2057 MSRP $300

E

E WINDSOR SMITH COLLECTION
FORTUNA CENTERPIECE
Polished Brass/Clear Acrylic
H: 1.5″ x W: 21.5″ x D: 8″
H: 4 x W: 57 x D: 20 cm
DS2015 MSRP $600

F **ETTA ICE BUCKET**
Black Hide/Brushed Brass/Stainless Steel Liner
H: 9.5″ x 10″ Dia
H: 24 x 25 Dia cm
*hide may vary
6097 MSRP $450

G **RITTER TRAY**
Matte Brass/Slate Veneer
H: 2.5″ x W: 16.5″ x D: 14″
H: 6 x W: 42 x D: 36 cm
2020 MSRP $510

F

G

A

B

C

D

E

F

G

A **ALESSANDRIA CONTAINERS, SET OF 3**
Bronze/Polished Brass Interior
H: 3.5" - 9" x 5"- 10.5" Dia
H: 9 - 20 x 13 - 27 Dia cm
2476 MSRP $450

B **ALESSANDRIA CONTAINERS, SET OF 3**
Polished Nickel/Polished Brass Interior
H: 3.5" - 8" x 5" - 10.5" Dia
H: 9 - 20 x 13 - 27 Dia cm
2477 MSRP $450

C **REGGIE TRAYS, SET OF 2**
Polished Nickel/Matte Steel/
Brass Welds
H: 1.5" x 11" Dia
H: 1.5" x 14" Dia
H: 4 x 28 Dia cm
H: 4 x 36 Dia cm
2078 MSRP $270

D **SWAIN CENTERPIECE**
Polished Nickel/Polished Brass Interior
H: 6" x W: 16.5" x D: 7.5"
H: 15 x W: 42 x D: 19 cm
6212 MSRP $270

E **CINCHWAIST OVAL TRAY**
Silver Leafed Iron/Plain Mirror
H: 3.5" x W: 21.5" x D: 19"
H: 9 x W: 55 x D: 48 cm
3137 MSRP $540

F **CINCHWAIST TRAY**
Gold Leafed Iron/Plain Mirror
H: 3" x 20" Dia
H: 8 x 51 Dia cm
3115 MSRP $495

G **SWAIN CENTERPIECE**
Polished Nickel
H: 6" x W: 16.5" x D: 7.5"
H: 15 x W: 42 x D:19 cm
6213 MSRP $270

A

B

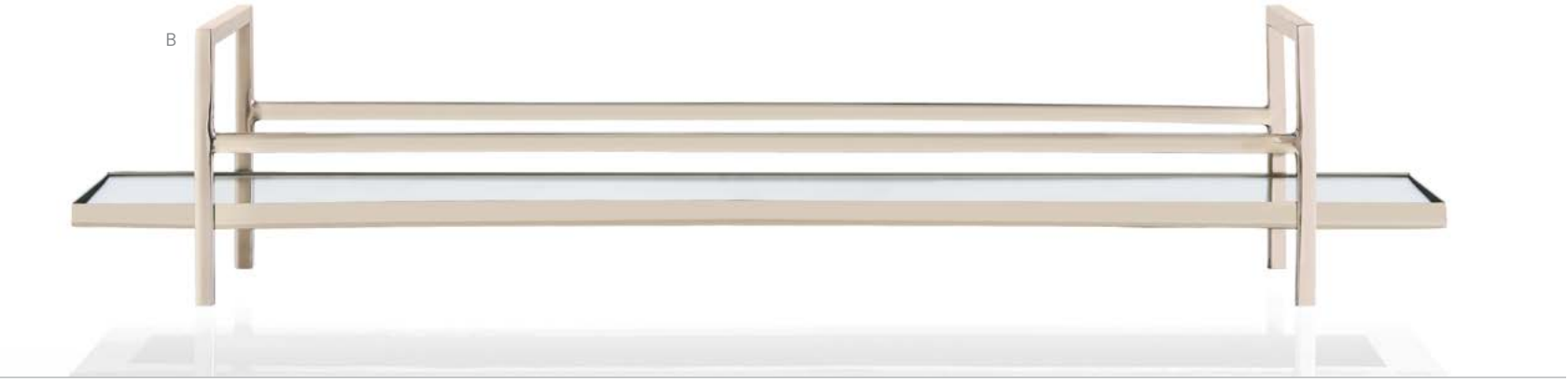

C

D

E

I

F G H

A **CHARLES TRAY**
Polished Nickel/Plain Mirror
H: 6" x W: 22" x D: 16"
H: 15 x W: 56 x D: 41 cm
2072 MSRP $480

B **CHARLES NARROW TRAY**
Polished Nickel/Plain Mirror
H: 5.5" x W: 27" x D: 5.5"
H: 14 x W: 69 x D: 14 cm
2007 MSRP $375

C **EXTON NARROW TRAY**
Black Marble/Vintage Silver
H: 3" x W: 27" x D: 6"
H: 8 x D: 69 x W: 15 cm
*marble may vary
6132 MSRP $300

D **EXTON TRAY**
Black Marble/Vintage Silver
H: 3" x W: 22" x D: 15"
H: 8 x D: 56 x D: 38 cm
*marble may vary
6133 MSRP $540

E **BORDEAUX LARGE TRAY**
Nickel
H: 2" x W: 23.5" x D: 17.5"
H: 5 x W: 60 x D: 44 cm
2503 MSRP $645

F **BROOKE SMALL CONTAINER**
Clear Glass/Polished Nickel
H: 7.5" x 4.5" Dia
H: 19 x 11 Dia cm
2507 MSRP $150

G **BROOKE LARGE CONTAINER**
Clear Glass/Polished Nickel
H: 12" x 6" Dia
H: 30 x 15 Dia cm
2506 MSRP $255

H **BROOKE MEDIUM CONTAINER**
Clear Glass/Polished Nickel
H: 9.5" x 6.5" Dia
H: 24 x 17 Dia cm
2505 MSRP $225

I **FILLMORE PITCHER**
Polished Stainless Steel/
Dark Natural Wood
H: 15" x W: 4" x D: 7"
H: 38 x W: 10 x D: 18 cm
6139 MSRP $390

A

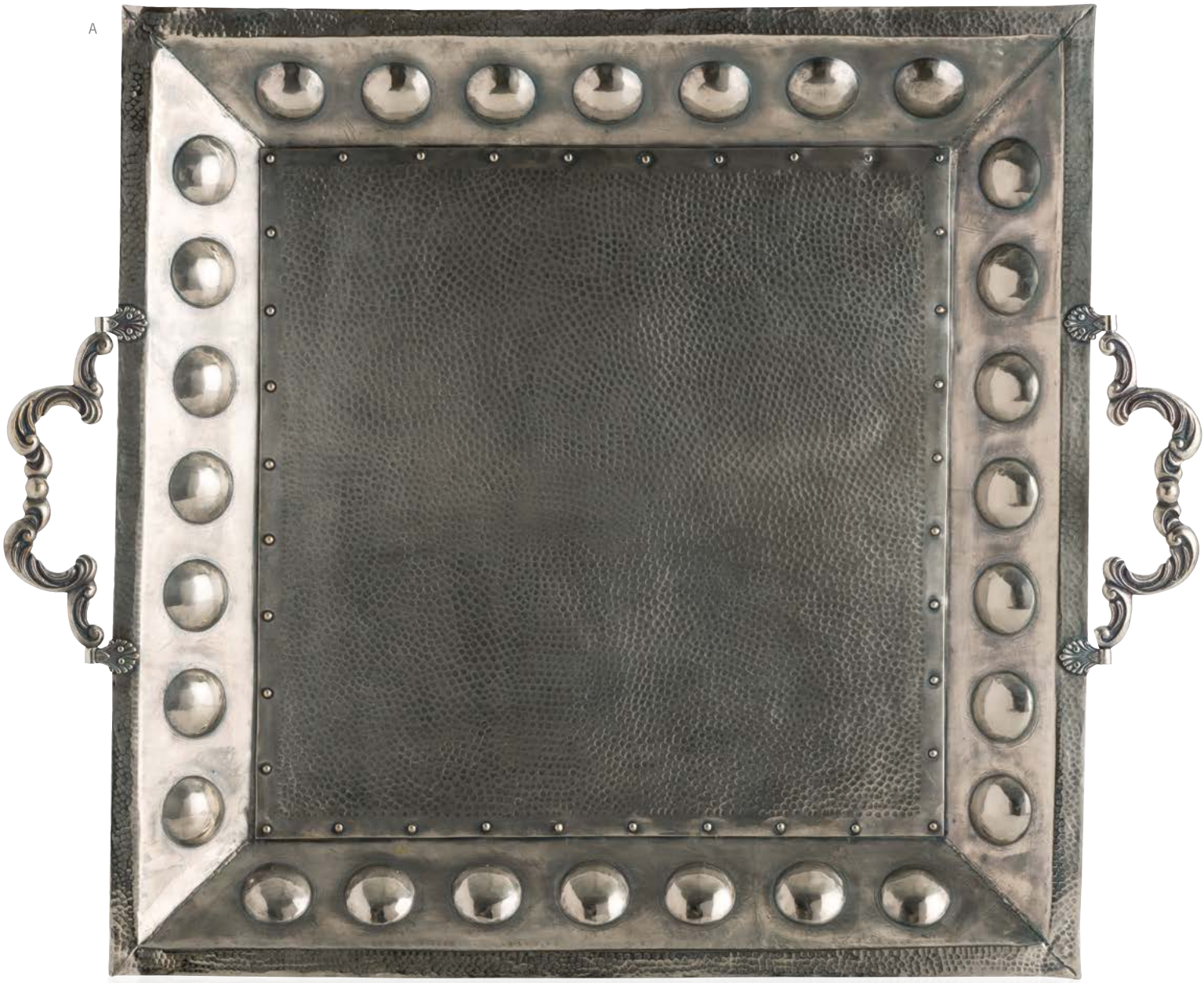

A WINDSOR SMITH COLLECTION
ANTONY TRAY
Antique Silver
H: 2.5" x W: 33.5" x D: 31.5"
H: 6 x W: 85 x D: 80 cm
DS2020 MSRP $2,400

B **BAKER TRAY**
Natural Iron/Brass Welds
H: 2" x W: 30" x D: 20"
H: 5 x W: 76 x D: 51 cm
2039 MSRP $450

C **BECKETT MAGAZINE RACK**
Natural Iron
H: 10.5" x W: 16" x D: 12"
H: 27 x W: 41 x D: 30 cm
2567 MSRP $450

D **ROCCO SCULPTURES, SET OF 3**
Hammered Natural Iron/Antique Brass
H: 8.5" - 13" x 3" - 6" Dia
H: 27 - 33 x 13 - 15 Dia cm
6665 MSRP $150

B

C

D

A

A **GRAZIA CENTERPIECE**
Natural Iron/Brass Welds
H: 5" x 18.5" Dia
H: 13 x 47 Dia cm
6179 MSRP $210

B **THORN CENTERPIECE**
Antique Bronze
H: 5" x 15" Dia
H: 13 x 38 Dia cm
6187 MSRP $240

C **PARSONS CONTAINER**
Bronze/Polished Brass/Matte Brass
H: 2.5" x 6.5" Dia
H: 6 x 17 Dia cm
2053 MSRP $150

D **RIYA CONTAINER**
Bronze/Polished Brass/Matte Brass
H: 3.5" x 6.5" Dia
H: 9 x 17 Dia cm
2055 MSRP $180

B

C

D

E

F

E **MADDY VASE**
Natural Iron/Polished Brass Insert
H: 4" x 9" Dia
H: 10 x 23 Dia cm
6398 MSRP $165

F **EBONY CONTAINER**
Bronze/Matte Brass
H: 3.5" x W: 6" x D: 5"
H: 9 x W: 16 x D: 13 cm
6160 MSRP $300

G **MILLICENT SMALL CENTERPIECE**
Bronze/Polished Nickel Interior
H: 6.5" x W: 12" x D: 8.5"
H: 17 x W: 30 x D: 22 cm
6970 MSRP $300

H **MILLICENT LARGE CENTERPIECE**
Bronze/Polished Nickel Interior
H: 10" x W: 18" x D: 14"
H: 25 x W: 46 x D: 36 cm
6971 MSRP $570

H

G

A

B

C

D

A **PIPER SMALL BOX**
Black Bronze/Antique Brass/
Black Wood
H: 3" x W: 10" x D: 3"
H: 8 x W: 25 x D: 8 cm
6538 MSRP $225

B **JAGGER RECTANGULAR BOX**
Natural Iron
H: 4.5" x W: 11" x D: 10"
H: 11 x W: 28 x D: 25 cm
*size may vary
6366 MSRP $480

C **PHELAN BOX**
Natural Iron/Polished Brass
H: 3.5" x W: 11" x D: 7.5"
H: 9 x W: 28 x D: 19 cm
6972 MSRP $420

D **PIPER LARGE BOX**
Black Bronze/Antique Brass/
Black Wood
H: 4.5" x W: 16.5" x D: 10.5"
H: 11 x W: 42 x D: 27 cm
4040 MSRP $780

E **BELFORT CONTAINERS, SET OF 3**
Vintage Brass/Stone
H: 13" x 4" Dia
H: 33 x 10 Dia cm
*stones may vary
4301 MSRP $600

E

A

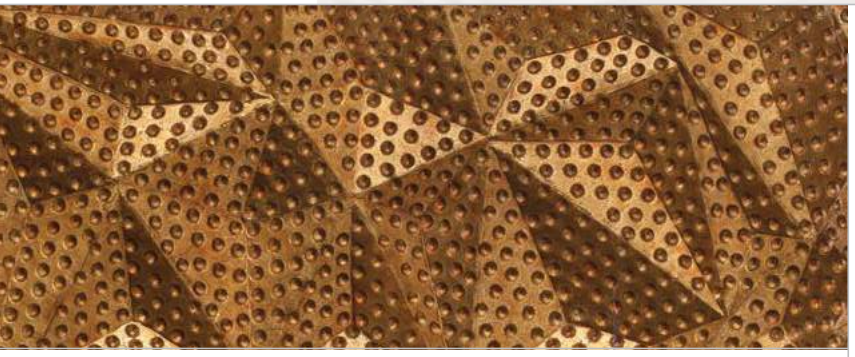

B

C

A **TRINITY BOXES, SET OF 2**
Mango Wood
H: 6.5" x W: 22" x D: 7"
H: 8" x W: 24" x D: 10"
H: 17 x W: 56 x D: 18 cm
H: 20 x W: 61 x D: 25 cm
2222 MSRP $585

B LAURA KIRAR COLLECTION
BAROQUE BOX
Antiqued Gold Resin/Felted Lining
H: 7" x W: 12" x D: 7.5"
H: 18 x W: 30 x D: 19 cm
DK9931 MSRP $390

C **PATRICK BOX**
Faux Horn/Antique Brass
H: 8.5" x W: 13.5" x D: 7"
H: 22 x W: 34 x D: 18 cm
*finish may vary
6076 MSRP $570

D **TRINITY SMALL BOXES, SET OF 2**
Whitewashed Wood
H: 6.5" x W: 13" x D: 8"
H: 8" x W: 15" x D: 10"
H: 17 x W: 33 x D: 20 cm
H: 20 x W: 38 x D: 25 cm
4296 MSRP $420

E **MAHINA CONTAINER**
Antiqued Ivory Crackle/
Brown Wash Porcelain
H:13.5" x 14" Dia
H: 34 x 36 Dia cm
*finish may vary
7692 MSRP $300

D

E

A

B

C

D

A **ZEKE LARGE LANTERN**
Reclaimed Teak Wood/Polished Nickel/
Clear Glass
H: 29" x D: 13" Sq
H: 74 x W: 33 cm Sq
6709 MSRP $645

B **ZEKE SMALL LANTERN**
Reclaimed Teak Wood/Polished Nickel/
Clear Glass
H: 21" x 10" Sq
H: 53 x 25 cm Sq
6710 MSRP $465

C **EGAN SMALL HURRICANE**
Natural Iron/Metallic Luster Glass
H: 20.5" x 5" Dia
H: 53 x 13 Dia cm
*finish may vary
2634 MSRP $435

D **EGAN LARGE HURRICANE**
Natural Iron/Metallic Luster Glass
H: 25.5" x 7" Dia
H: 65 x 18 Dia cm
*finish may vary
2635 MSRP $465

E **BOWEN SMALL HURRICANE**
Natural Iron/Hammered Clear Glass
H: 21" x 10" Sq
H: 53 x 25 cm Sq
2256 MSRP $510

F **BOWEN LARGE HURRICANE**
Natural Iron/Hammered Clear Glass
H: 22.5" x 15" Sq
H: 57 x 38 cm Sq
2257 MSRP $780

E

F

G

G **BOWEN FLOOR HURRICANE**
Natural Iron/Hammered Clear Glass
H: 47.5" x 10" Sq
H: 121 x 25 cm Sq
2650 MSRP $600

A **UMA FLOOR HURRICANE**
Matte Brass/Smoke Luster Glass
H: 43.5" x 9.5" Dia
H: 110 x 24 Dia cm
*finish may vary
2715 MSRP $1,200

B **SIBLEY SMALL HURRICANE**
Smoke Luster Glass/Antique Brass
H: 12" x 8" Dia
H: 30 x 20 Dia cm
*finish may vary
2711 MSRP $300

C **SIBLEY LARGE HURRICANE**
Smoke Luster Glass/Antique Brass
H: 15" x 7" Dia
H: 38 x 18 Dia cm
*finish may vary
2712 MSRP $330

A

C

B

D

E

F

D **BOMBAY LARGE HURRICANE**
Polished Nickel/Clear Glass
H: 18.5" x 9.5" Dia
H: 47 x 24 Dia cm
2494 MSRP $450

E **BOMBAY SMALL HURRICANE**
Polished Nickel/Clear Glass
H: 14.5" x 9.5" Dia
H: 37 x 24 Dia cm
2497 MSRP $420

F **WORTH HURRICANE**
Antique Brass/Clear Glass
H: 17" x 10" Dia
H: 43 x 25 Dia cm
2346 MSRP $465

G **BOMBAY CENTERPIECES, SET OF 2**
Polished Nickel/Antique Brass
H: 3" x 14" Dia
H: 3.5" x 17" Dia
H: 8 x 36 Dia cm
H: 9 x 43 Dia cm
2498 MSRP $390

G

90% in stock, ships in 72 hours

A

B

A **DOLAN MAGAZINE RACK**
Matte Brass
H: 15″ x W: 14.5″ x D: 16″
H: 38 x W: 37 x D: 41 cm
6115 MSRP $450

B **HENRY FIREPLACE TOOL SET**
Black Waxed Iron/Distressed Aluminum Handles
H: 39″ x W: 12.5″ x D: 9″
H: 99 x W: 32 x D: 23 cm
*finish may vary
6331 MSRP $900

C

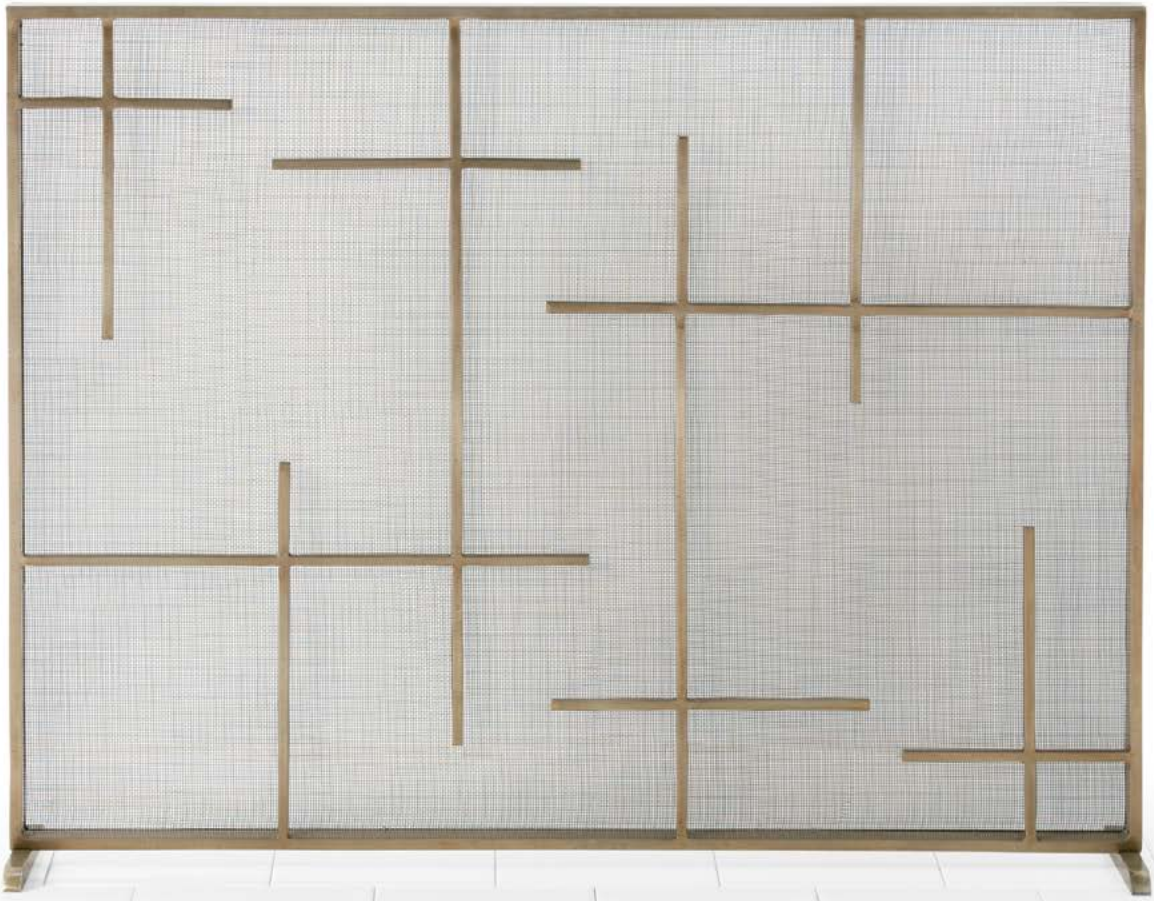

C **CALEB FIRE SCREEN**
Antique Brass
H: 31″ x W: 40″ x D: 7″
H: 79 x W: 102 x D: 18 cm
4405 MSRP $1,200

D

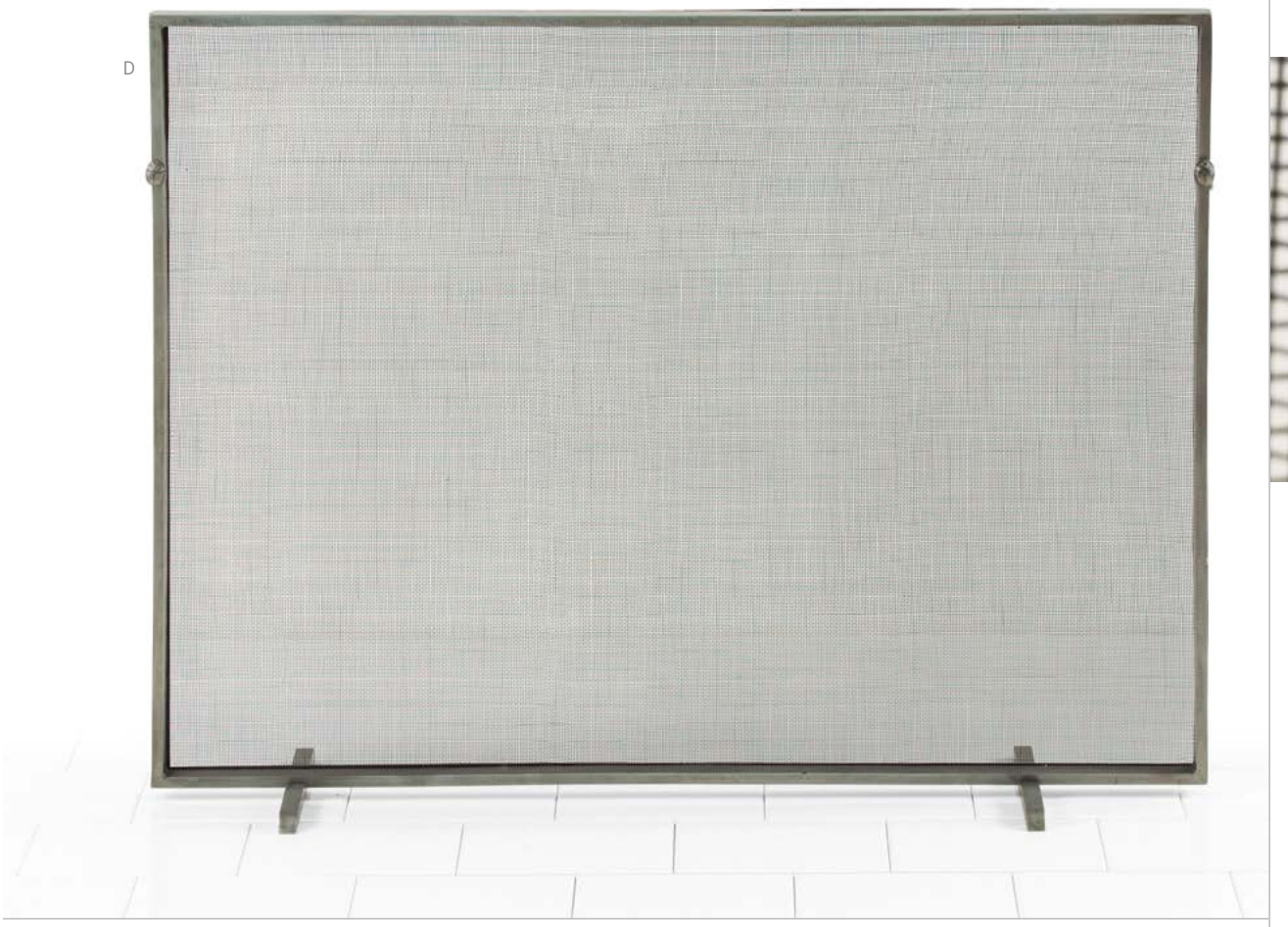

D **GITA SCREEN**
Antique Zinc/Mesh
H: 30.5" x W: 40" x D: 7"
H: 77 x W: 102 x D: 18 cm
4202 MSRP $1,140

E

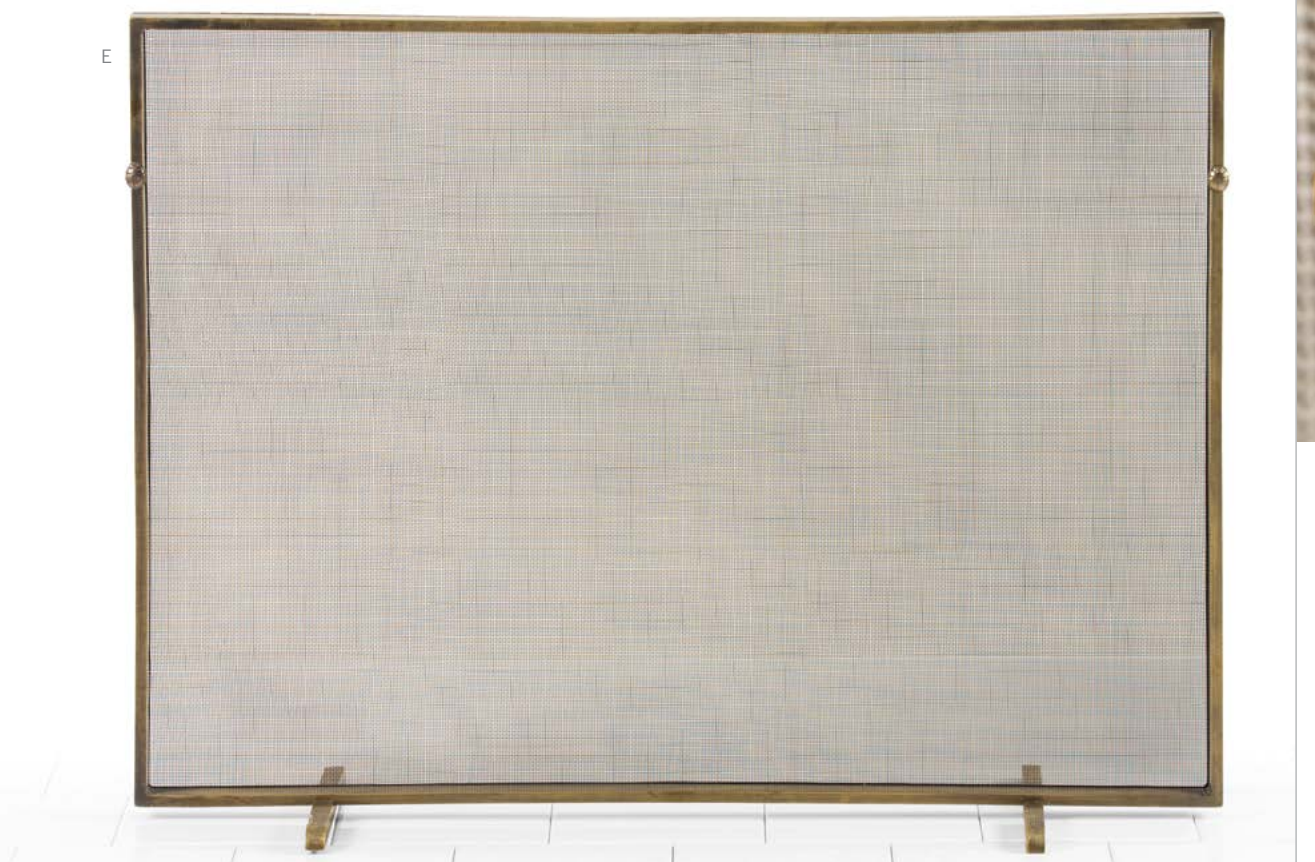

E **GITA SCREEN**
Antique Brass/Mesh
H: 30.5" x W: 40" x D: 7"
H: 77 x W: 102 x D: 18 cm
4201 MSRP $1,140

PRODUCT INDEX

ITEM#	LTR	PG	ITEM#	LTR	PG	ITEM#	LTR	PG	ITEM#	LTR	PG	ITEM#	LTR	PG	ITEM#	LTR	PG	ITEM#	LTR	PG
2001	D	211	2413	A	258	2657	C	311	3075	D	241	4313	D	342	6175	D	221	6633	B	226
2007	B	368	2415	D	197	2660	B	236	3077	C	241	4332	D	307	6179	A	372	6650	D	238
2008	B	312	2420	D	217	2661	D	314	3109	D	345	4333	B	240	6180	C	285	6655	C	216
2011	A	346	2422	C	351	2662	C	314	3115	F	367	4335	E	223	6181	E	203	6665	D	371
2015	A	290	2433	C	266	2663	E	314	3125	E	345	4352	A	298	6187	B	372	6682	B	218
2020	G	365	2447	A	226	2664	C	247	3127	A	356	4361	B	294	6198	B	232	6683	E	239
2021	C	232	2448	A	234	2670	E	255	3130	D	301	4367	D	362	6204	A	294	6684	A	296
2025	A	236	2476	A	366	2671	D	255	3132	B	310	4368	E	362	6212	D	366	6698	E	258
2026	E	207	2477	B	366	2674	A	358	3136	B	334	4405	C	382	6213	G	367	6699	F	258
2028	C	218	2479	F	341	2675	B	358	3137	E	367	4520	C	225	6232	F	215	6705	E	235
2029	B	248	2485	G	229	2676	C	358	3138	C	291	4806	C	204	6235	I	315	6709	A	378
2031	A	232	2486	A	200	2681	C	238	3139	B	356	4821	A	286	6236	D	289	6710	B	378
2032	F	219	2487	D	251	2683	B	286	3146	D	311	4829	A	246	6237	D	309	6740	D	253
2034	B	214	2494	D	381	2684	C	302	3147	E	311	5322	G	237	6238	D	215	6747	C	214
2036	A	228	2497	E	381	2687	D	203	3148	F	311	5406	E	228	6241	E	309	6751	C	270
2038	A	216	2498	G	381	2688	C	287	3163	B	296	5407	A	306	6251	C	305	6754	B	202
2039	B	371	2501	D	205	2689	C	227	3236	E	353	5410	B	350	6310	C	228	6772	B	264
2040	C	249	2503	E	369	2690	E	339	3920	G	207	5414	A	350	6323	B	348	6777	E	217
2043	H	347	2505	H	369	2693	E	357	4007	A	214	5415	D	351	6331	B	382	6799	G	315
2044	C	260	2506	G	369	2694	C	346	4013	C	202	5416	C	307	6336	E	209	6804	B	364
2051	A	302	2507	F	369	2695	D	357	4022	E	269	6020	A	210	6338	A	248	6805	C	364
2053	C	373	2510	D	209	2696	D	295	4028	C	344	6021	B	210	6343	E	233	6815	A	260
2055	D	373	2516	D	337	2697	E	271	4040	D	375	6023	E	349	6347	H	315	6816	D	303
2056	B	292	2525	A	212	2698	B	285	4054	B	196	6034	B	216	6362	A	332	6818	C	243
2057	D	364	2526	E	213	2705	A	270	4057	E	341	6035	E	215	6366	B	374	6822	C	309
2072	A	368	2527	B	212	2709	D	312	4066	B	342	6047	F	233	6369	F	343	6830	C	245
2078	C	366	2545	G	361	2710	D	225	4069	C	342	6060	A	268	6392	G	239	6833	B	242
2081	C	293	2547	D	293	2711	B	380	4071	D	232	6061	B	268	6393	G	327	6970	G	373
2085	A	364	2548	A	196	2712	C	380	4073	D	353	6073	B	260	6398	E	373	6971	H	373
2089	D	243	2556	B	299	2715	A	380	4074	C	353	6076	C	376	6417	C	197	6972	C	374
2090	A	242	2567	C	371	2724	A	202	4081	A	300	6088	A	342	6420	F	347	6973	C	357
2091	A	240	2589	D	228	2726	B	346	4082	C	301	6097	F	365	6421	E	347	6978	C	251
2117	A	208	2590	C	234	2733	B	246	4083	A	204	6098	D	268	6422	G	347	6981	A	244
2118	E	221	2591	B	234	2734	D	227	4086	C	340	6109	C	355	6423	A	330	6982	F	205
2120	C	220	2592	A	230	2736	B	352	4087	D	340	6114	D	234	6425	G	331	6983	E	205
2124	B	228	2596	C	253	2741	F	363	4088	B	340	6115	A	382	6435	B	338	6994	D	258
2134	D	297	2602	F	209	2742	H	363	4098	H	327	6118	B	224	6436	A	338	7038	E	335
2180	F	361	2603	D	219	2743	G	363	4109	B	244	6119	C	295	6439	F	239	7039	F	335
2198	D	291	2605	A	344	2747	H	259	4116	B	302	6120	J	259	6479	B	308	7104	C	337
2210	D	271	2608	F	339	2748	F	361	4132	F	207	6121	I	259	6497	B	300	7183	C	334
2220	A	220	2611	B	290	2750	E	257	4138	C	264	6122	D	355	6509	B	354	7509	D	360
2222	A	376	2612	B	230	2763	D	257	4142	D	338	6126	B	344	6524	B	238	7665	F	319
2230	D	249	2614	I	363	2801	B	220	4143	C	338	6132	C	368	6525	F	241	7666	B	319
2236	A	308	2620	A	360	2803	C	254	4144	B	330	6133	D	368	6527	F	237	7676	B	320
2249	F	358	2621	B	360	2804	A	254	4145	C	330	6139	I	369	6531	A	218	7690	C	333
2250	D	358	2622	C	360	2805	B	254	4174	C	319	6141	F	269	6535	G	259	7692	E	377
2251	E	358	2625	F	314	2820	C	256	4175	D	319	6142	B	270	6538	A	374	7707	B	333
2256	E	379	2634	C	378	2821	A	256	4190	J	363	6143	C	268	6539	E	241	7713	A	320
2257	F	379	2635	D	378	2822	B	256	4191	A	352	6155	C	208	6553	E	219	7714	D	329
2284	A	288	2638	D	223	2852	A	334	4201	E	383	6158	E	313	6556	B	200	7715	E	329
2285	B	288	2639	G	339	2996	B	252	4202	D	383	6159	G	313	6557	B	204	7727	C	329
2312	E	361	2644	F	235	3000	D	349	4228	E	237	6160	F	373	6561	C	297	7738	B	321
2346	F	381	2650	G	379	3002	E	301	4233	H	361	6163	H	239	6579	A	314	7987	D	328
2352	A	312	2651	E	343	3012	A	348	4280	C	312	6167	C	206	6580	B	314	8000	A	262
2355	A	238	2653	C	211	3016	I	347	4296	D	377	6168	A	264	6581	H	233	8001	D	263
2361	C	195	2654	E	231	3017	D	346	4299	C	348	6169	F	217	6598	C	236	8002	B	262
2401	F	223	2655	E	331	3052	A	310	4301	E	375	6170	A	292	6621	A	252	8003	C	262
2408	B	336	2656	F	331	3058	G	233	4303	F	229	6171	C	289	6632	D	236	8005	E	263

PRODUCT INDEX

ITEM#	LTR	PG	ITEM#	LTR	PG	ITEM#	LTR	PG	ITEM#	LTR	PG	ITEM#	LTR	PG	ITEM#	LTR	PG	ITEM#	LTR	PG
8006	F	263	44324	D	169	49911	E	160	86782	C	125	89670	E	93	17100-262	A	22	42009-378	B	8
9001	A	326	44325	A	178	49912	F	160	86786	C	139	89700	D	137	17240-311	G	23	42016-395	E	15
9004	D	231	44330	D	160	49935	D	51	86800	E	135	89701	A	112	17255-503	G	39	42017-928	G	29
9005	C	230	45100	D	147	49940	C	55	86801	D	135	89702	D	133	17332-441	E	27	42026-414	G	17
9009	D	207	45101	C	147	49942	A	54	89000	B	103	89962	D	101	17336-453	B	36	42027-454	D	17
9105	B	326	45102	A	146	49953	A	186	89001	D	91	89966	A	98	17419-553	B	42	42085-481	H	29
9107	D	326	45103	B	146	49956	A	166	89002	D	93	89967	B	90	17438-348	B	34	42086-725	A	6
9108	C	326	46361	B	148	49957	B	166	89003	C	105	89967	B	92	17523-209	A	34	42086-984	B	6
9109	E	326	46501	C	177	49961	E	173	89004	A	102	89969	A	90	17525-215	D	34	42087-492	C	48
9111	A	324	46508	H	159	49962	D	173	89005	B	104	89969	B	165	17526-172	C	22	42089-496	F	23
9112	C	324	46576	C	134	49963	C	172	89006	A	104	89970	A	92	17526-239	D	22	42132-219	F	15
9113	B	324	46603	E	158	49980	C	113	89008	E	137	89970	C	165	17528-443	H	43	42328-798	E	13
9115	A	284	46604	D	177	49982	C	167	89009	B	114	89974	B	106	17530-738	B	22	42430-384	A	26
9621	E	325	46643	D	125	49984	A	182	89010	D	85	89976	C	95	17540-667	B	38	42447-796	C	41
9653	D	324	46645	A	160	49985	B	186	89011	B	84	89977	A	94	17541-668	D	26	42522-913	A	20
9999	F	325	46646	B	160	49986	E	183	89012	A	84	89978	B	94	17547-251	A	38	42682-480	F	21
41001	B	152	46651	C	178	49991	A	188	89013	B	98	89979	D	95	17548-257	C	42	42683-329	A	28
41002	A	152	46658	A	154	49992	B	188	89013	C	85	89981	C	99	17548-522	D	42	42683-974	B	28
41003	D	152	46691	B	168	49993	C	187	89014	B	113	89985	A	136	17549-258	F	35	42780-523	E	25
41004	C	152	46692	A	168	49995	C	185	89016	C	101	89986	E	89	17551-265	C	36	43015-427	A	32
41155	E	47	46758	I	157	49996	E	167	89017	A	100	89989	C	92	17552-331	H	35	43136-109	F	29
42011	I	159	46780	E	155	49997	D	167	89018	B	97	89991	C	90	17553-337	A	14	43160-360	E	33
42024	D	187	46806	D	154	49999	D	175	89023	C	133	89992	D	89	17556-343	D	44	44000-516	A	18
42046	D	170	46811	F	171	72002	C	64	89024	C	111	89994	B	136	17556-909	C	44	44001-566	B	18
42076	B	48	46821	A	126	72082	A	76	89025	C	107	89995	B	132	17560-299	E	45	44010-996	D	32
42077	A	48	46829	F	153	79000	C	59	89026	D	107	89998	C	117	17699-983	D	37	44017-581	E	35
42078	A	170	46831	A	108	79001	B	62	89027	D	83	11136-499	C	26	17703-102	C	30	44018-887	D	7
42079	B	170	47438	C	160	79006	D	59	89028	B	82	11137-471	G	31	17706-525	D	38	44070-320	C	14
42080	D	179	47555	K	157	79007	B	58	89029	C	83	11152-176	A	44	17709-301	B	26	44105-272	C	20
42081	C	158	48610	E	177	79047	A	62	89030	A	82	11152-926	B	44	17712-838	B	40	44109-838	B	20
42082	C	170	49003	G	159	79661	C	63	89032	D	99	11153-181	C	46	17716-514	B	30	44135-956	A	8
42083	B	178	49006	E	175	79680	A	58	89033	B	139	11154-184	F	31	17725-354	F	39	44141-434	G	9
42084	B	154	49008	E	171	79889	D	67	89034	C	137	11156-194	C	38	17729-317	F	43	44148-972	F	7
42088	D	48	49009	B	162	79935	C	67	89035	A	86	11157-207	E	43	17734-527	A	36	44150-968	I	33
42301	A	174	49010	A	162	79953	A	66	89036	C	103	11179-569	H	27	17768-633	A	42	44300-793	G	15
42413	H	155	49012	B	116	79991	B	66	89037	B	100	11182-132	E	31	17932-794	H	39	44360-807	D	14
42414	I	155	49018	C	174	79998	D	63	89038	A	130	11186-934	A	30	1A01T01G	D	279	44449-149	H	15
42415	F	155	49020	D	191	82000	B	129	89045	B	87	11190-525	E	41	1A03V06D	B	280	44469-153	D	20
42466	C	154	49023	B	50	82001	A	128	89046	A	106	12002-210	B	32	1A06T02D	D	275	44498-412	B	14
42470	E	49	49024	E	55	82003	D	109	89048	B	130	12012-398	F	33	1A08T03D	A	274	46456-390	C	28
42502	C	156	49029	A	52	82100	A	164	89049	C	88	12094-290	B	24	1A11V01C	A	278	46574-273	F	25
42514	G	157	49030	E	51	84060	B	124	89295	A	110	12446-803	C	12	1A12V06G	A	276	46574-990	H	25
44009	G	155	49031	B	172	84171	B	140	89305	B	122	12535-457	E	29	1A13T02G	D	277	46614-274	A	24
44011	B	176	49032	A	172	84173	A	140	89324	D	143	12979-688	G	35	2010-66	D	199	46619-861	E	21
44015	D	181	49033	B	52	84174	C	141	89408	B	120	14006-214	G	33	2054-48	B	198	46633-163	C	32
44016	L	157	49034	D	131	84175	D	141	89414	A	124	14006-580	H	33	2098-66	A	198	46723-717	G	21
44043	G	153	49035	A	184	84176	A	138	89416	C	121	15408-394	D	18	2430-60	D	195	46727-780	H	21
44065	J	155	49036	F	173	84310	E	127	89417	A	122	15422-356	D	30	2A01V04G	C	279	46755-923	E	19
44071	A	156	49037	F	55	84313	C	108	89418	C	123	15424-351	F	45	2A02T03D	C	281	46779-782	D	28
44073	B	156	49206	B	143	84315	A	134	89420	A	120	15425-231	E	37	2A03L01D	A	280	46820-458	G	19
44077	B	108	49558	B	144	84620	A	132	89421	D	123	15426-245	D	47	2A06V03D	C	275	46820-992	F	19
44081	D	156	49675	F	49	84621	C	126	89559	A	144	16453-315	G	27	2A08T03D	B	274	49025-219	B	12
44082	H	157	49680	C	50	84622	B	134	89560	A	142	16456-804	C	18	3195-48	C	201	49027-598	D	5
44083	E	156	49700	B	54	86719	D	145	89624	C	149	17021-710	E	39	3A04T03D	B	276	49028-616	G	25
44084	F	156	49702	A	176	86720	C	145	89625	A	148	17059-588	D	41	3A05V06D	D	281	49629-868	C	34
44320	A	180	49865	C	115	86738	C	143	89626	D	149	17092-323	F	37	3A09T01D	C	277	49632-967	F	27
44322	B	180	49866	D	115	86761	D	121	89668	A	96	17095-232	E	23	3A10T02D	B	278	49701-362	B	184
44323	C	169	49889	A	50	86764	B	126	89669	E	91	17096-227	H	23	4051-60	C	199	49710-665	A	4

PRODUCT INDEX

ITEM#	LTR	PG
49711-682	A	16
49712-713	G	13
49713-715	G	7
49714-720	F	17
49715-759	D	12
49716-768	E	5
49850-504	C	8
49878-189	C	24
49878-556	D	24
49882-590	H	13
49897-359	C	16
49898-734	B	16
49931-511	F	13
49933-546	F	51
49936-400	B	5
49937-400	C	5
49938-912	B	11
49939-917	A	10
49941-921	D	55
49943-925	C	11
49945-281	E	17
49946-269	F	9
49948-268	A	12
72001-941	B	64
72003-944	C	69
72004-946	B	60
72004-947	C	60
72005-977	C	57
72006-948	E	73
72007-957	B	68
72008-965	D	73
72009-953	C	73
72009-971	B	73
72010-987	D	77
72011-419	C	77
72017-542	E	71
72067-966	D	71
72092-501	A	74
72567-364	B	74
73103-640	B	78
73121-899	A	78
73141-139	C	79
73142-140	D	79
76492-333	D	75
76552-259	B	76
76645-110	C	75
79017-988	D	65
79048-905	A	60
79825-344	A	70
79862-661	F	61
79914-869	D	69
79932-555	D	61
79932-769	E	61
79956-148	C	70
79957-157	B	70
79986-386	B	56
79988-101	A	68
79999-196	E	65

ITEM#	LTR	PG
DD2000	B	222
DD2004	A	304
DD2015	B	266
DD2016	D	267
DD2021	A	354
DD2022	C	222
DD2024	B	306
DD2028	C	213
DD2029	D	213
DD2035	A	222
DD2056	A	266
DD2061	E	267
DD2062	F	213
DD2063	A	340
DD2068	B	206
DD2069	A	206
DD2070	E	319
DD2071	D	201
DD2405	B	208
DD2602	B	305
DD42031-696	D	185
DD42055	D	158
DD42614	E	169
DD5001	E	253
DD72050-857	A	72
DJ2012	F	231
DJ2015	I	359
DJ2022	A	362
DJ2023	C	362
DJ2024	B	362
DJ2026	G	359
DJ2027	H	359
DJ2030	J	359
DK42043	D	127
DK42047	A	158
DK42050	B	158
DK46020	J	157
DK46023	C	131
DK46027	F	135
DK49909	J	161
DK49910	G	161
DK49911	K	161
DK49912	H	161
DK49913	L	161
DK49914	I	161
DK49938-757	G	43
DK49957	B	174
DK6018	A	336
DK7023	F	327
DK89900	C	119
DK89902	A	118
DK89903	B	118
DK89904	A	116
DK89907	D	119
DK89951	B	110
DK9931	B	376
DR2045	A	250
DR2057	B	250

ITEM#	LTR	PG
DR6009	C	258
DR6010	B	258
DS12010-111	C	6
DS17002-167	B	46
DS17003-174	F	47
DS17004-186	A	40
DS17007-165	G	47
DS2000	D	265
DS2001	E	265
DS2007	D	330
DS2008	F	329
DS2011-48	A	194
DS2012-72	B	194
DS2013	A	224
DS2014	F	323
DS2015	E	365
DS2016	G	323
DS2017	A	318
DS2018	E	323
DS2019	F	270
DS2020	A	330
DS44001-145	E	7
DS44004	C	181
DS44005-133	G	37
DS44006	E	179
DS44007-154	D	9
DS44008-444	E	9
DS49002	F	183
DS49005	B	182
DS49006	D	183
DS49008	D	189
DS49009	C	189
DS49011	E	151
DS49012	C	182
DS49013	B	150
DS49014	B	190
DS49015	A	190
DS49016	C	191
DS49017	F	159
DS49018	D	151
DS49019	C	150
DS49020-205	A	46
DS49021	D	163
DS49022	C	163
DS49023	D	53
DS49024	C	52
DS7000	D	335
DS7001	D	322
DS7005	C	328
DS7006	D	321
DS7008	G	335
DS7009	A	328
DS79000	A	64
DS79001	A	56
DS79002	D	57
DS84000	E	153
DS89000	D	111
DS89001	A	114

ITEM#	LTR	PG
DS89004	F	151
DS89005	A	150
DS89006	B	88
DS89007	A	88
DS9005	C	322
DS9012	B	322
DS9013	A	322
DS9014	F	313
DS9015	D	261
DS9017	F	261
DS9018	E	261

PIPES & CHAINS FOR CHANDELIERS & PENDANTS

ITEM#	PART#	DESCRIPTION
41001	PIPE-123	Polished Brass Ext Pipe (1) 6″ and (1) 12″ pipe
41002	PIPE-123	Polished Brass Ext Pipe (1) 6″ and (1) 12″ pipe
41003	PIPE-127	Polished Nickel (1) 6″ & (1) 12″ pipe
41004	PIPE-127	Polished Nickel (1) 6″ & (1) 12″ pipe
42011	PIPE-122	Antique Silver Ext Pipe (1) 6″ and (2) 12″ pipe
42081	PIPE-144	Antique Brass Ext Pipe (1) 6″ and (1) 12″
42084	CHN-125	3′ Natural Iron Chain
42466	CHN-946	3′ Chain - English Bronze
44009	PIPE-142	Black Iron Ext Pipe (1) 6″ and (1) 12″
44016	PIPE-143	Brushed Nickel Ext Pipe (1) 6″ and (1) 12″
44043	CHN-999	3′ Chain- Nickel
44083	PIPE-137	Antique Brass Ext Pipe (1) 6″ and (1) 12″
44507	CHN-114	3′ Natural Iron Chain
44508	CHN-115	3′ Natural Iron Chain
45100	CHN-101	3′ Matte Black Iron Chain
45101	CHN-101	3′ Matte Black Iron Chain
45102	CHN-101	3′ Matte Black Iron Chain
45103	CHN-101	3′ Matte Black Iron Chain
46361	CHN-955	3′ Chain - Antique Brass
46508	PIPE-138	Polished Brass Ext Pipe (1) 6″ and (1) 12″
46576	CHN-973	3′ Chain - Gold Leaf
46806	CHN-947	3′ Chain - White
46821	PIPE-114	Antique Brass Ext Pipe (1) 6″ and (1) 12″
46829	CHN-946	3′ Chain - English Bronze
46831	CHN-980	3′ Chain - Blackened Iron
48609	PIPE-139	Antique Brass Ext Pipe (1) 6″ and (1) 12″
49003	PIPE-132	Square Antique Brass Ext Pipe (1) 6″ and (1) 12″
49012	PIPE-134	Square Vintage Silver Ext Pipe (1) 6″ and (1) 12″
49013	PIPE-136	Square Antique Brass Ext Pipe (1) 6″ and (1) 12″
49034	PIPE-101	Antique Brass Ext Pipe (1) 6″ and (1) 12″
49034	PIVOT-103	Antique Brass Pivot
49558	CHN-127	3′ White Chain
49865	CHN-931	3′ Chain - Nickel
49866	PIPE-118	Nickel Extension Pipe (set 4) 7.75″
49912	CHN-931	3′ Chain - Nickel
49980	PIPE-101	Antique Brass Ext Pipe (1) 6″ and (1) 12″
49980	PIVOT-103	Antique Brass Pivot
82000	CHN-122	3′ Silver Leaf Chain
82001	CHN-123	3′ Gold Leaf Chain
82003	CHN-124	3′ Natural Iron Chain
84060	CHN-121	3′ Polished Nickel Chain
84171	CHN-987	3′ Chain - Rusted Iron
84173	CHN-987	3′ Chain - Rusted Iron
84174	CHN-987	3′ Chain - Rusted Iron
84175	CHN-987	3′ Chain - Rusted Iron
84176	CHN-975	3′ Chain - Burnt Wax
84310	PIPE-140	Antique Brass Ext Pipe (1) 6″ and (1) 12″
84313	CHN-116	3′ Antique Brass Chain
84315	CHN-984	3′ Chain - Burnished Silver
84620	CHN-117	3′ Gold Leaf Chain
84621	CHN-118	3′ Natural Iron Chain
84622	CHN-119	3′ Blackened Iron Chain
86719	CHN-947	3′ Chain - White
86720	CHN-947	3′ Chain - White
86738	CHN-980	3′ Chain - Blackened Iron
86764	CHN-983	3′ Chain - Natural Iron
86786	CHN-975	3′ Chain - Burnt Wax
86800	CHN-886	3′ Chain- Gold Leafed Iron
86801	CHN-886	3′ Chain- Gold Leafed Iron
89000	PIPE-126	Vintage Silver Ext Pipe (1) 6″ and (1) 12″
89000	PIVOT-106	Vintage Silver Pivot
89001	PIPE-101	Antique Brass Ext Pipe (1) 6″ and (1) 12″
89001	PIVOT-103	Antique Brass Pivot
89002	PIPE-100	Polished Nickel Ext Pipe (1) 6″ and (1) 12″
89002	PIVOT-100	Polished Nickel Pivot
89005	PIPE-126	Vintage Silver Ext Pipe (1) 6″ and (1) 12″
89005	PIVOT-106	Vintage Silver Pivot
89006	PIPE-101	Antique Brass Ext Pipe (1) 6″ and (1) 12″
89006	PIVOT-103	Antique Brass Pivot
89008	PIPE-134	Brushed Nickel Ext Pipe (1) 6″ and (1) 12″
89009	PIPE-100	Polished Nickel Ext Pipe (1) 6″ and (1) 12″
89009	PIVOT-100	Polished Nickel Pivot
89010	PIPE-100	Polished Nickel Ext Pipe (1) 6″ and (1) 12″
89010	PIVOT-100	Polished Nickel Pivot
89011	PIPE-101	Antique Brass Ext Pipe (1) 6″ and (1) 12″
89011	PIVOT-103	Antique Brass Pivot
89012	PIPE-101	Antique Brass Ext Pipe (1) 6″ and (1) 12″
89012	PIVOT-103	Antique Brass Pivot
89013	PIPE-100	Polished Nickel Ext Pipe (1) 6″ and (1) 12″
89013	PIVOT-100	Polished Nickel Pivot
89014	PIPE-101	Antique Brass Ext Pipe (1) 6″ and (1) 12″
89014	PIVOT-103	Antique Brass Pivot
89016	PIPE-101	Antique Brass Ext Pipe (1) 6″ and (1) 12″
89016	PIVOT-103	Antique Brass Pivot
89017	PIPE-103	Brown Nickel Ext Pipe (1) 6″ and (1) 12″
89017	PIVOT-101	Brown Nickel Pivot
89018	PIPE-101	Antique Brass Ext Pipe (1) 6″ and (1) 12″
89018	PIVOT-103	Antique Brass Pivot
89024	CHN-979	3′ Chain - Vintage Brass
89025	PIPE-101	Antique Brass Ext Pipe (1) 6″ and (1) 12″
89025	PIVOT-103	Antique Brass Pivot
89026	PIPE-105	Bronze Ext Pipe (1) 6″ and (1) 12″
89027	PIPE-101	Antique Brass Ext Pipe (1) 6″ and (1) 12″
89027	PIVOT-103	Antique Brass Pivot
89027	PIPE-101	Antique Brass Ext Pipe (1) 6″ and (1) 12″
89027	PIVOT-100	Polished Nickel Pivot
89028	PIPE-126	Vintage Silver Ext Pipe (1) 6″ and (1) 12″
89028	PIVOT-106	Vintage Silver Pivot
89028	PIPE-126	Vintage SilverExt Pipe (1) 6″ and (1) 12″
89028	PIVOT-106	Vintage Silver Pivot
89029	PIPE-101	Antique Brass Ext Pipe (1) 6″ and (1) 12″
89029	PIVOT-103	Antique Brass Pivot
89029	PIPE-101	Antique Brass Ext Pipe (1) 6″ and (1) 12″
89029	PIVOT-100	Polished Nickel Pivot
89030	PIPE-126	Vintage Silver Ext Pipe (1) 6″ and (1) 12″
89030	PIVOT-106	Vintage Silver Pivot
89030	PIPE-126	Vintage SilverExt Pipe (1) 6″ and (1) 12″
89030	PIVOT-106	Vintage Silver Pivot
89032	PIPE-100	Polished Nickel Ext Pipe (1) 6″ and (1) 12″
89032	PIVOT-100	Polished Nickel Pivot
89033	PIPE-107	Antique Bronze Ext Pipe (1) 6″ and (1) 12″
89034	CHN-120	3′ Polished Brass Chain
89035	PIPE-101	Antique Brass Ext Pipe (1) 6″ and (1) 12″
89035	PIVOT-103	Antique Brass Pivot
89036	PIPE-126	Vintage SilverExt Pipe (1) 6″ and (1) 12″
89037	PIPE-103	Brown Nickel Ext Pipe (1) 6″ and (1) 12″
89038	PIPE-101	Antique Brass Ext Pipe (1) 6″ and (1) 12″
89038	PIVOT-103	Antique Brass Pivot
89045	PIPE-126	Vintage SilverExt Pipe (1) 6″ and (1) 12″
89045	PIVOT-106	Vintage Silver Pivot
89046	PIPE-105	Bronze Ext Pipe (1) 6″ and (1) 12″
89046	PIVOT-104	Bronze Pivot
89048	PIPE-126	Vintage SilverExt Pipe (1) 6″ and (1) 12″
89048	PIVOT-106	Vintage Silver Pivot
89049	PIPE-101	Antique Brass Ext Pipe (1) 6″ and (1) 12″
89049	PIVOT-103	Antique Brass Pivot
89295	CHN-928	3′ Chain- Antique Brass
89305	CHN-912	3′ Chain -Burnished Silver
89324	CHN-975	3′ Chain - Burnt Wax
89408	CHN-935	3′ Chain - Antique Silver
89414	CHN-942	3′ Chain - Dark Antique Brass
89416	CHN-935	3′ Chain - Antique Silver
89417	CHN-950	3′ Chain - Bronze
89418	CHN-950	3′ Chain - Bronze
89420	CHN-935	3′ Chain - Antique Silver
89421	CHN-950	3′ Chain - Bronze
89559	CHN-959	3′ Chain - Ivory
89560	CHN-128	3′ Natural Iron Chain
89624	PIPE-108	Aged Iron Ext Pipe (1) 6″ and (1) 12″
89625	PIPE-105	Bronze Ext Pipe (1) 6″ and (1) 12″
89626	PIPE-109	Aged Iron Ext Pipe (3) 14″
89669	PIPE-101	Antique Brass Ext Pipe (1) 6″ and (1) 12″
89669	PIVOT-103	Antique Brass Pivot
89670	PIPE-100	Polished Nickel Ext Pipe (1) 6″ and (1) 12″
89670	PIVOT-100	Polished Nickel Pivot
89700	PIPE-145	Bronze Ext Pipe (1) 6″ and (1) 12″
89701	CHN-129	3′ Antique Brass Chain
89702	CHN-129	3′ Antique Brass Chain
89962	PIPE-101	Antique Brass Ext Pipe (1) 6″ and (1) 12″
89962	PIVOT-103	Antique Brass Pivot
89966	PIPE-110	Vintage Brass Ext Pipe (1) 6″ and (1) 12″
89966	PIVOT-105	Vintage Brass Pivot
89974	PIPE-120	Square Bronze Ext Pipe (1) 6″ and (1) 12″
89976	PIPE-110	Vintage Brass Ext Pipe (1) 6″ and (1) 12″
89976	PIVOT-105	Vintage Brass Pivot
89977	PIPE-100	Polished Nickel Ext Pipe (1) 6″ and (1) 12″
89977	PIVOT-100	Polished Nickel Pivot
89978	PIPE-100	Polished Nickel Ext Pipe (1) 6″ and (1) 12″
89978	PIVOT-100	Polished Nickel Pivot
89979	PIPE-110	Vintage Brass Ext Pipe (1) 6″ and (1) 12″
89979	PIVOT-105	Vintage Brass Pivot
89981	PIPE-103	Brown Nickel Ext Pipe (1) 6″ and (1) 12″
89981	PIVOT-101	Brown Nickel Pivot
89986	PIPE-101	Antique Brass Ext Pipe (1) 6″ and (1) 12″
89986	PIVOT-103	Antique Brass Pivot
89989	PIPE-100	Polished Nickel Ext Pipe (1) 6″ and (1) 12″
89989	PIVOT-100	Polished Nickel Pivot
89991	PIPE-101	Antique Brass Ext Pipe (1) 6″ and (1) 12″
89991	PIVOT-103	Antique Brass Pivot
89992	PIPE-101	Antique Brass Ext Pipe (1) 6″ and (1) 12″
89992	PIVOT-103	Antique Brass Pivot
DD42055	CHN-991	3′ Chain - Antique Brass
DK42043	CHN-994	3′ Chain - Gold
DK46023	PIPE-121	Antique Brass Ext Pipe (1) 6″ and (1) 12″ pipe
DK46027	PIPE-128	Gold Leaf (1) 6″ & (1) 12″ Pipe
DK49909	PIPE-100	Polished Nickel Ext Pipe (1) 6″ and (1) 12″
DK49909	PIVOT-100	Polished Nickel Pivot
DK49910	PIPE-103	Brown Nickel Ext Pipe (1) 6″ and (1) 12″
DK49910	PIVOT-101	Brown Nickel Pivot
DK49911	PIPE-100	Polished Nickel Ext Pipe (1) 6″ and (1) 12″
DK49911	PIVOT-100	Polished Nickel Pivot
DK49912	PIPE-103	Brown Nickel Ext Pipe (1) 6″ and (1) 12″
DK49912	PIVOT-101	Brown Nickel Pivot
DK49913	PIPE-100	Polished Nickel Ext Pipe (1) 6″ and (1) 12″
DK49913	PIVOT-100	Polished Nickel Pivot
DK49914	PIPE-103	Brown Nickel Ext Pipe (1) 6″ and (1) 12″
DK49914	PIVOT-101	Brown Nickel Pivot
DK89902	CHN-960	3′ Chain - Polished Nickel
DK89903	CHN-961	3′ Chain - Brown Nickel
DK89907	CHN-960	3′ Chain - Polished Nickel
DK89951	PIPE-113	Antique Brass Ext Pipe (1) 6″ and (1) 12″
DS49011	CHN-132	3′ Square Vintage Silver Chain
DS49013	CHN-133	3′ Square Antique Brass Chain
DS49018	CHN-132	3′ Square Vintage Silver Chain
DS49019	CHN-133	3′ Square Antique Brass Chain
DS89001	PIPE-126	Vintage Silver Ext Pipe (1) 6″ and (1) 12″
DS89001	PIVOT-106	Vintage Silver Pivot

UPHOLSTERY LINE ART

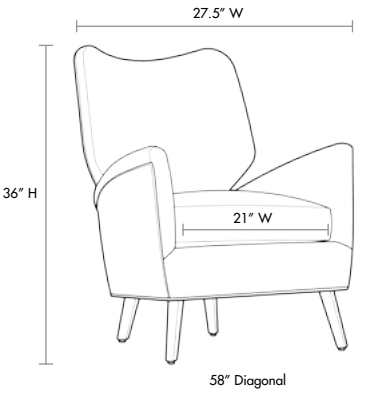

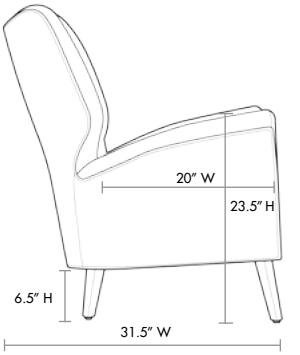

Beck Chair

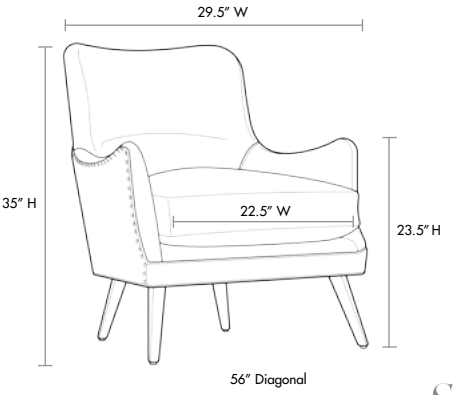

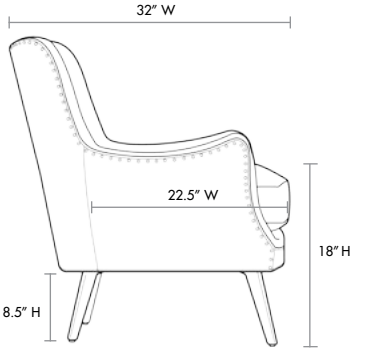

Seger Chair

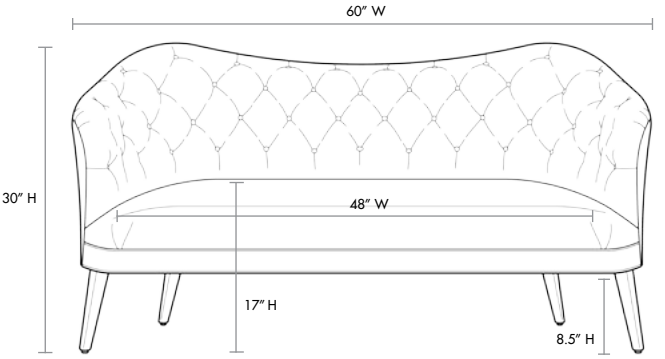

Marley Settee

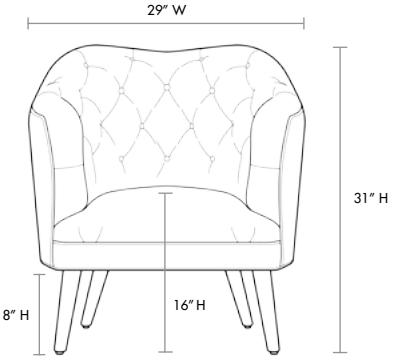

Marley Chair

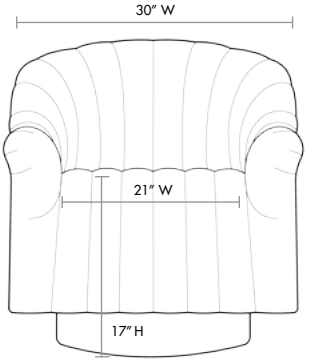

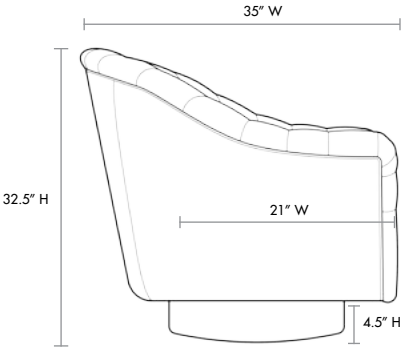

Springsteen Chair

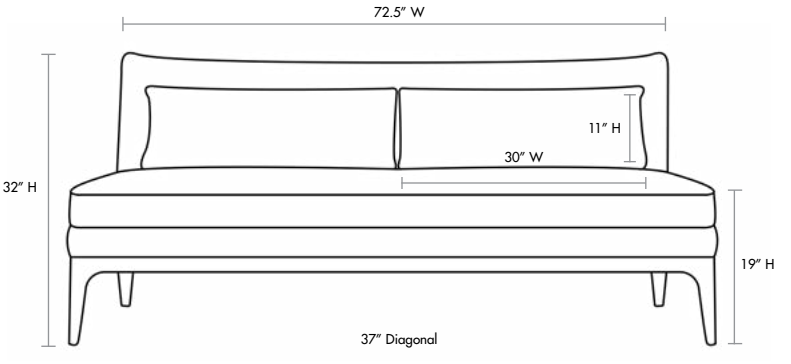

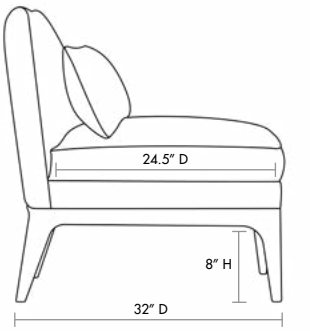

Lucia Settee

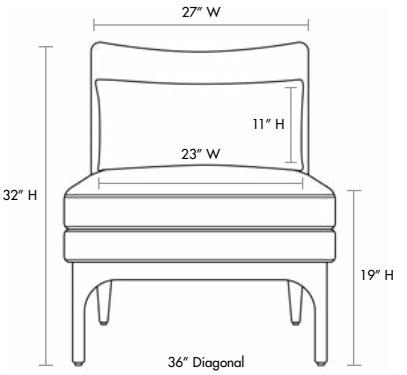

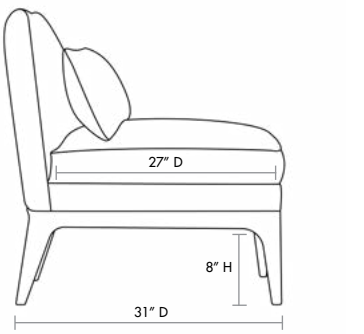

Lucia Chair

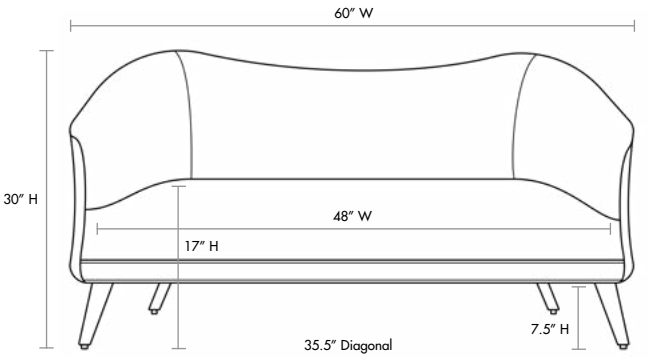

Duprey Settee

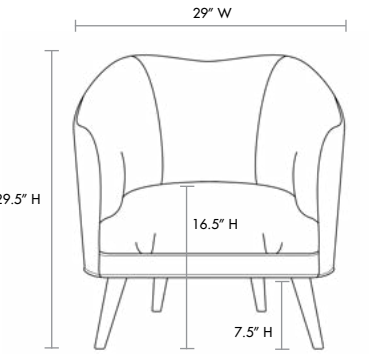

Duprey Chair

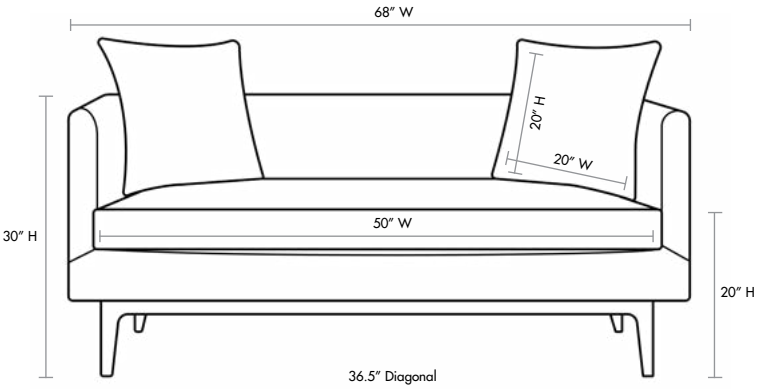

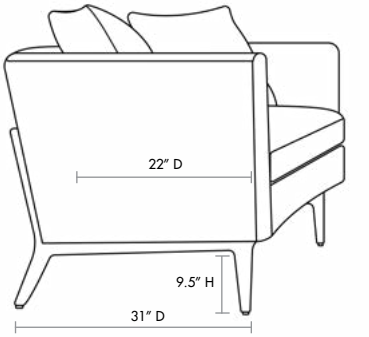

Mustique Settee

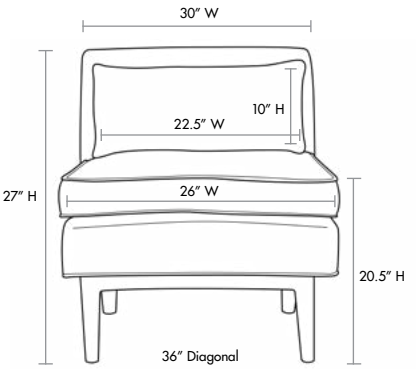

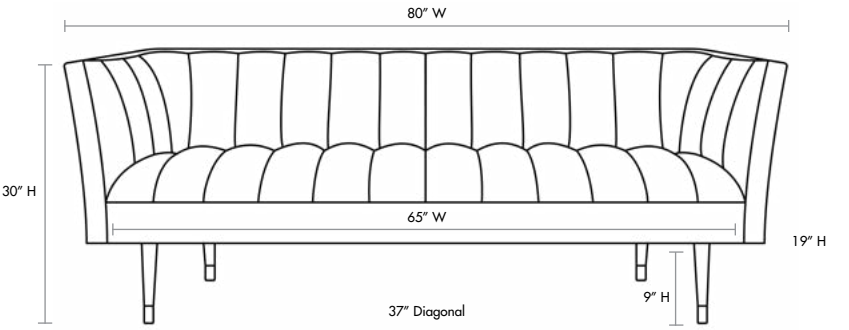

Christophe Sofa

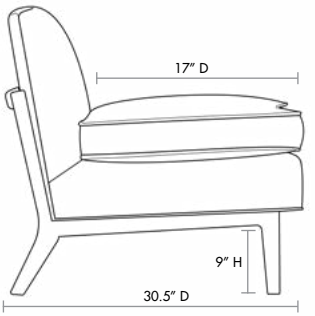

Mustique Chair

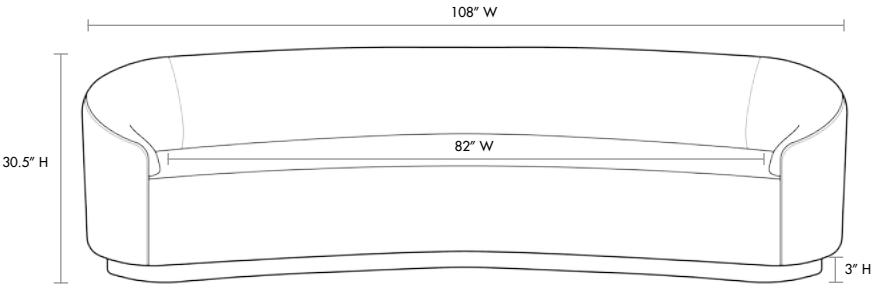

Turner Sofa

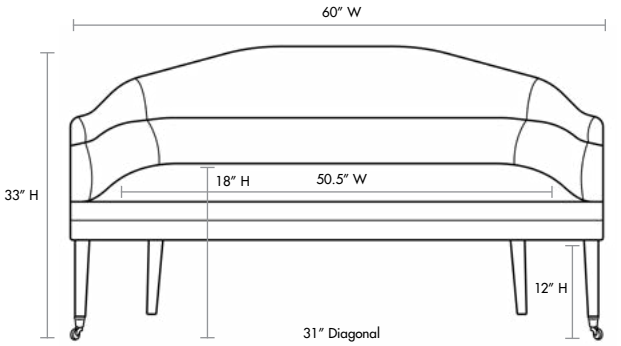

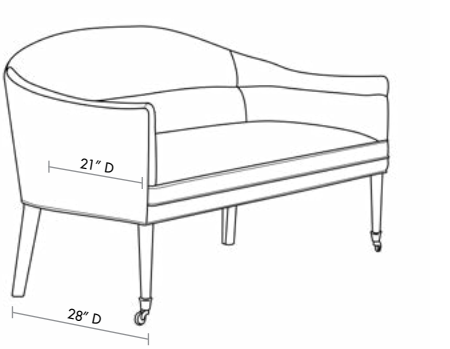

Vernon Settee

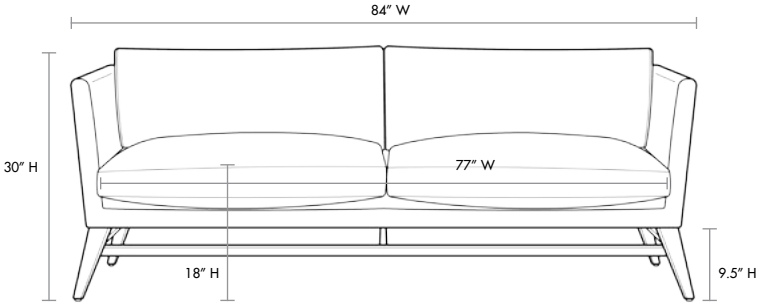

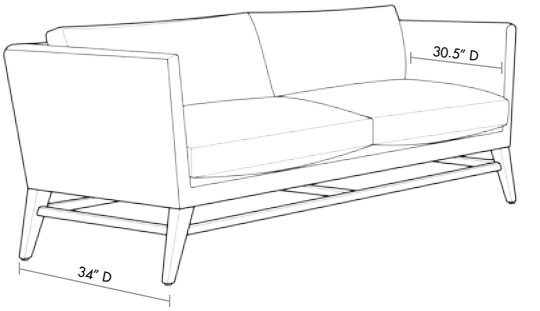

McCartney Sofa

PRODUCT DESCRIPTION KEY

IMAGE REFERENCE → A GUEST DESIGNER ← GUEST DESIGNER (WHERE APPLICABLE)

HERST LAMP ← PRODUCT NAME

MATERIAL & FINISH → Snow Marble/Vintage Brass

Ivory Microfiber Shade/Matching Lining ← SHADE OR ADDITIONAL DETAILS

H: 23.5″ x 14.5″/7.5″ Rect ← PRODUCT DIMENSIONS INCHES

H: 58 x 37/19 cm Rect ← PRODUCT DIMENSIONS CM

MAXIMUM WATTAGE PER SOCKET → Max Watts: 60 On/Off ← SWITCHING

ADDITIONAL INFORMATION → *marble may vary

ITEM NUMBER → **49931-511** MSRP $1,350 ← MANUFACTURER'S SUGGESTED RETAIL PRICE *prices subject to change

TRUCK SHIP

ASSEMBLY REQUIRED

DAMP RATED – Products approved for use in bathrooms, indoor pools, utility rooms, covered outdoor patios, and balconies.

DINING TABLE KEY

A **THATCHER DINING TABLE**
Natural Iron/ Clear Glass
H: 30″ x 54″ Dia
H: 76 x 137 Dia cm
*also available with 48,″ 60,″ and 66″ Dia glass tops ← When ordering this table with one of the alternate tops, the item number will be as follows: Item number – size. For example, 4051-54 is the item number for the Naomi table with a 54″ round top.
2010-54 MSRP $6,300

WALL DÉCOR KEY

A **VERA LARGE MIRROR**
Convex Antiqued Mirror
36″ Dia x D: 3.5″
92 Dia x D: 9 cm
* d ring hangers →
* finish may vary
6822 MSRP $2,835

WALL HANGER TYPES

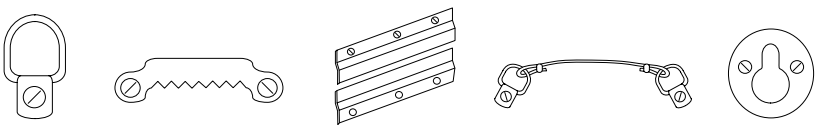

D-Ring Sawtooth Security Cleat Wire Keyhole

TO FIND YOUR SALES REPRESENTATIVE VISIT
ARTERIORSHOME.COM/REPS

Proud supporter of

©2017 Arteriors Home ALL RIGHTS RESERVED

90% IN-STOCK
SHIPS WITHIN 72 HOURS
TO FIND YOUR SALES REPRESENTATIVE VISIT
ARTERIORSHOME.COM/REPS