# FX-3666-4 INSTALLATION SHEET

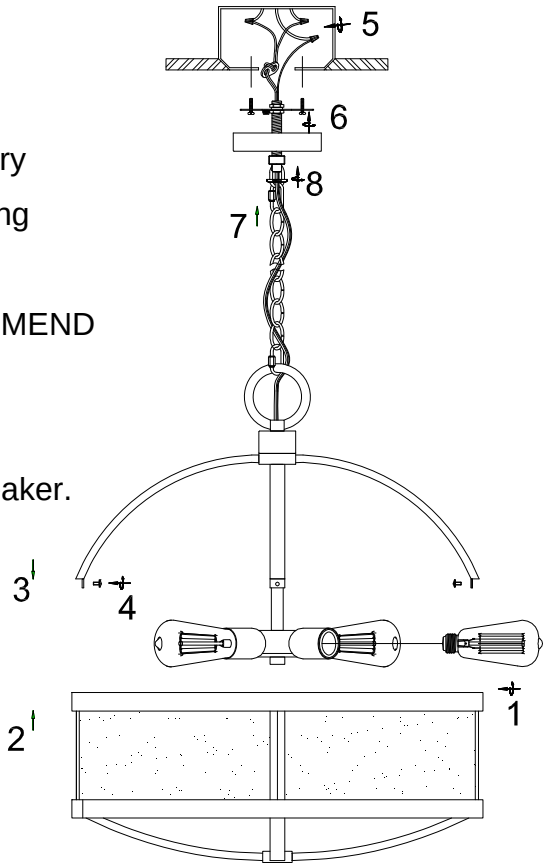


IMPORTANT SAFETY INSTRUCTIONS:

* These instructions are provided for your safety.It is very important that they are read completely before beginning the installation of your fixture.

* DIRECT WIRE FIXTURES: WE STRONGLY RECOMMEND INSTALLATLON BY A LICENSED ELECTRICIAN.

TO ASSEMBLE:

Shut off the main electrical supply at fuse box/circuit breaker.

1. Install the bulbs (not included) (1).

2.Attach the light shade part (2) to the bend pipe (3) and fix them with screws (4).

3.Put the wire through the canopy and the straight bar, connect the ground wires "⏚" ,Cathode wire "N" , Anode wire "L" to the supply wire in the junction box as illustrated (5).

4. Affix mounting bar to junction box using mounting screws (6).

5.Leave desired length of wire outside the canopy, connect lighting body and the canopy with chain (7), affix the canopy to the ceiling by the ring (8)

Turn on power and enjoy!!!

**Use 60WX4 Max type A BULB (Bulb not included)**

WARNINGS:

Turn off power (unplug from the wall outlet) before replacing the bulb(s), making sure the bulb(s) have sufficient time to cool down.

Do not subject the lighting fixture to any shock while lit as shattering of bulbs may result .

To avoid risk of fire, do not exceed the recommended wattage.

CARE INSTRUCTIONS:

To clean, use a soft cloth only. DO NOT use any chemical or abrasive cleaners.

★ Keep this instruction for future reference