CAL LIGHTING

3625 E. Philadelphia St. Ontario CA. 91761。Tel: 909.947.5200。Fax: 909.947.5673。www.calighting.com。service@calighting.com。
Specifications subject to change without notice

Type: _____
Project: _____
Catalog No.: _____
Lamp/Wattage: _____

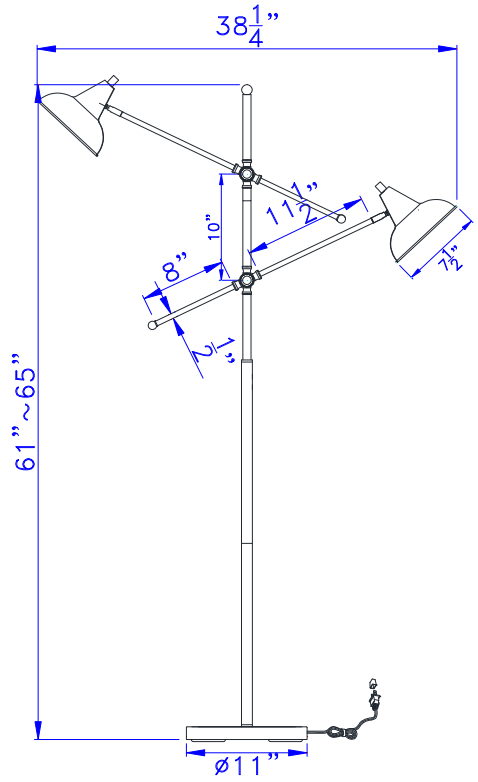

Model No:	BO-2794FL-DB
Description:	60W x 2 Canterbury metal adjustable floor lamp
Material:	METAL
Finish :	Dark Bronze
Height:	61"~65"
Reach/Depth:	11"
Base Width:	Dia.11"
Wattage :	60W x 2
Socket :	Medium Base (E26)
Switch:	On/off
Bulb:	Incandescent, CFL
Wire Length:	6'
Wire Color:	Black
Shade No:	
Material:	Metal
Shade size:	Dia. 7 1/2"
Certificate :	c UL us