CRYST RAMA
1958
95 Cantiague Rock Road, Westbury NY 11590
ph:516.931.9090 fax: 516. 931.1254
info@crystorama.com www.crystorama.com

MODEL#:803
ASSEMBLY AND DRESSING INSTRUCTIONS

WARNING:

All electrical components must be installed by a licensed electrician in accordance with the National Electric Code and the appropriate local electrical codes.

RECOMMENDED AT 18" LONG,
MAKE SURE THAT YOU WILL SEE THE BULB.
IF NECESSARY CUTTING THE
HANGING WIRE.

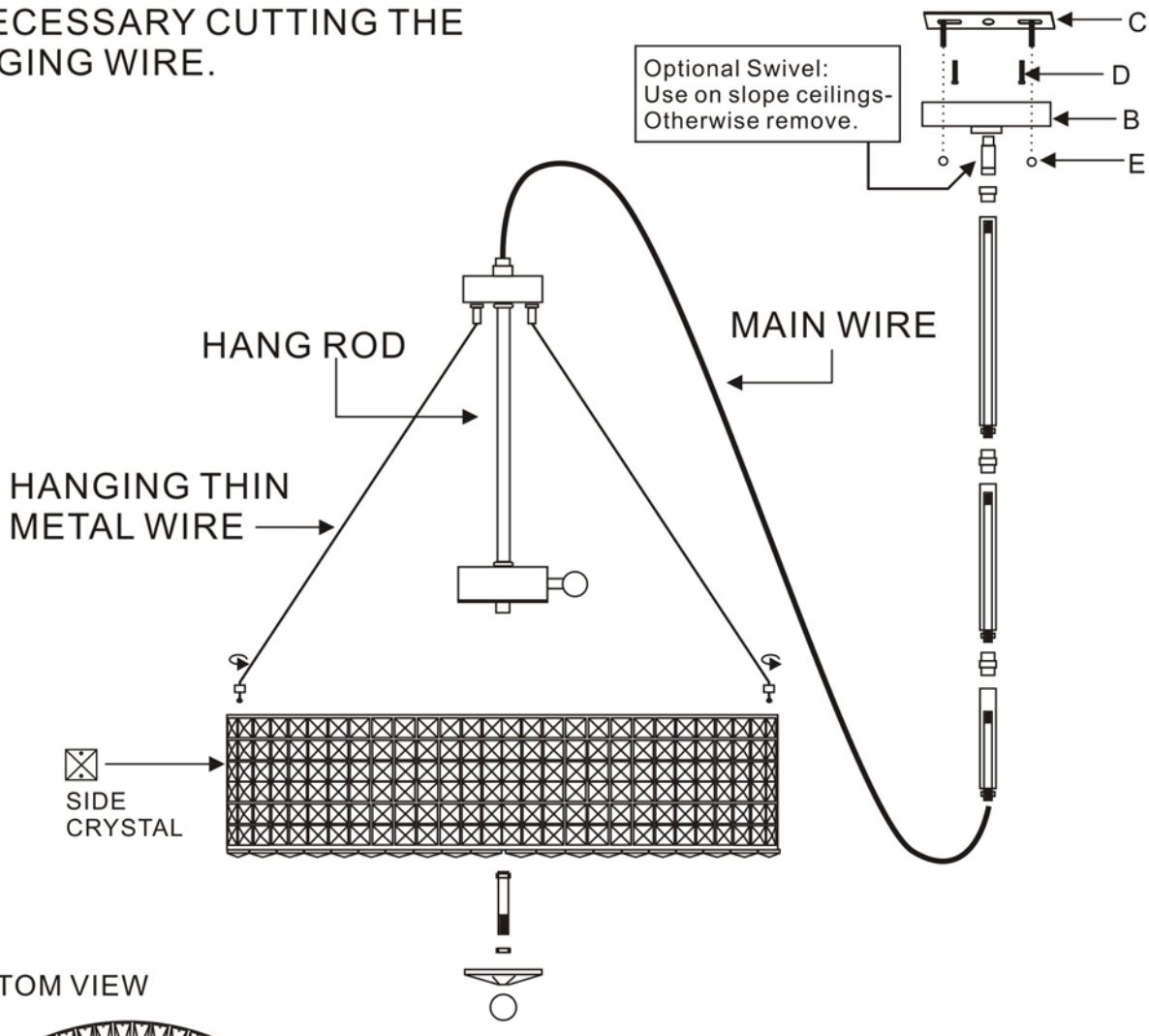

BOTTOM VIEW

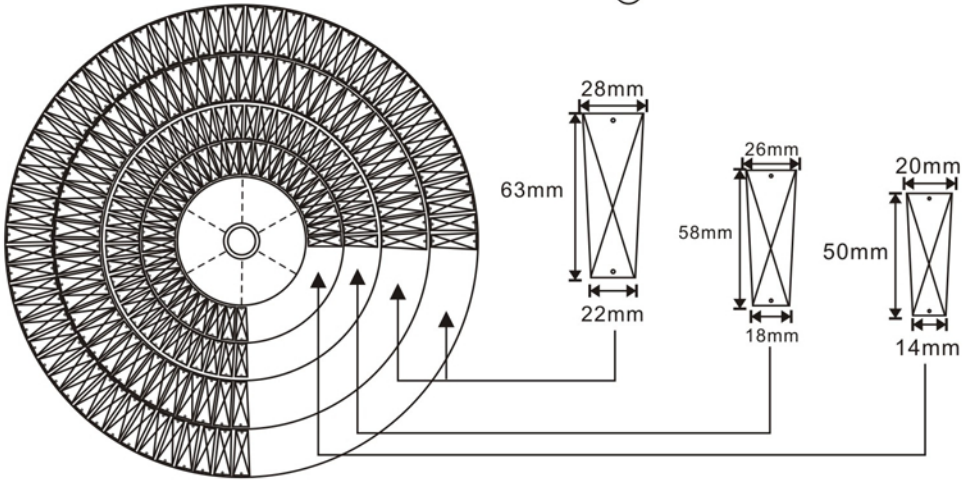

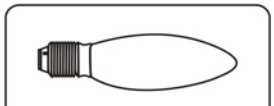

You will need 8 - Cand.Bulb
40 Watts Recommended
60 Watts Max
Bulb not included.

2009/4/7