LIGHTS of DISTINCTION
CRYSTORAMA LIGHTING GROUP

95 Cantiague Rock Road, Westbury,NY 11590
Phone:(516) 931-9090 Fax:(516) 931-1254

ASSEMABLY INSTRUCTIONS FOR 9317

IMPORTANT
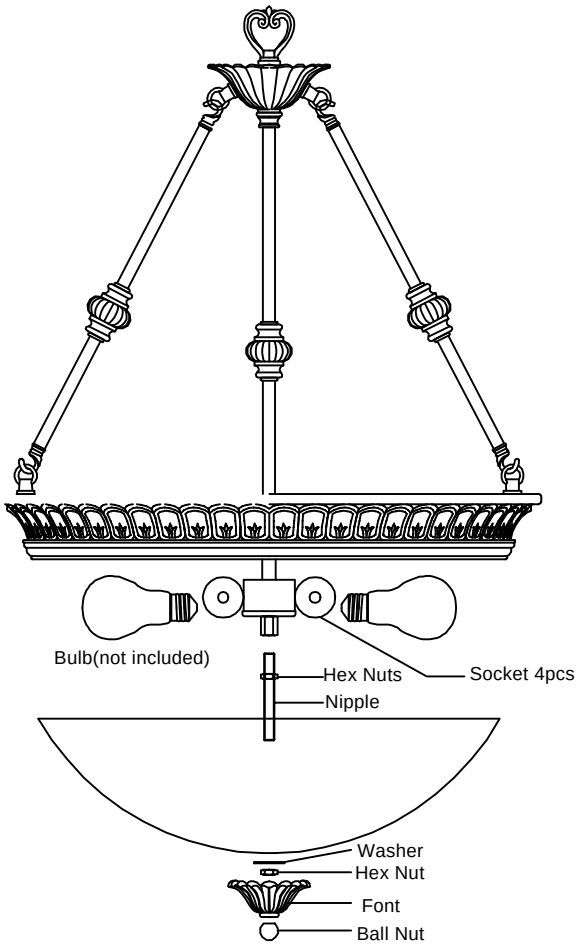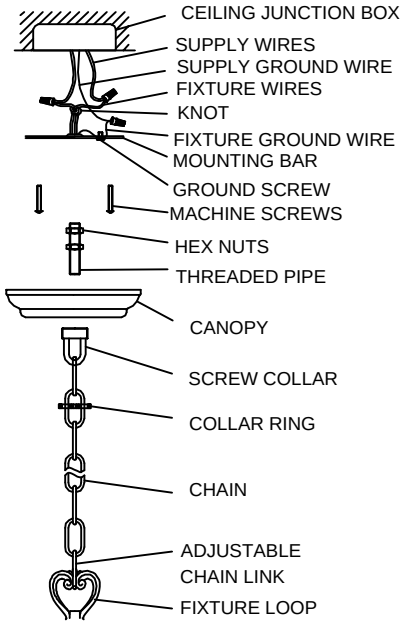
TURN OFF THE POWER AT THE MAIN FUSE
OR CIRCUIT BREAKER BOX
BEFORE STARTING INSTALLATION