PRODUCT NAME: Westport
ITEM NUMBER: 34204 / 34205

Please consult your electrician for hanging fixture and wiring.

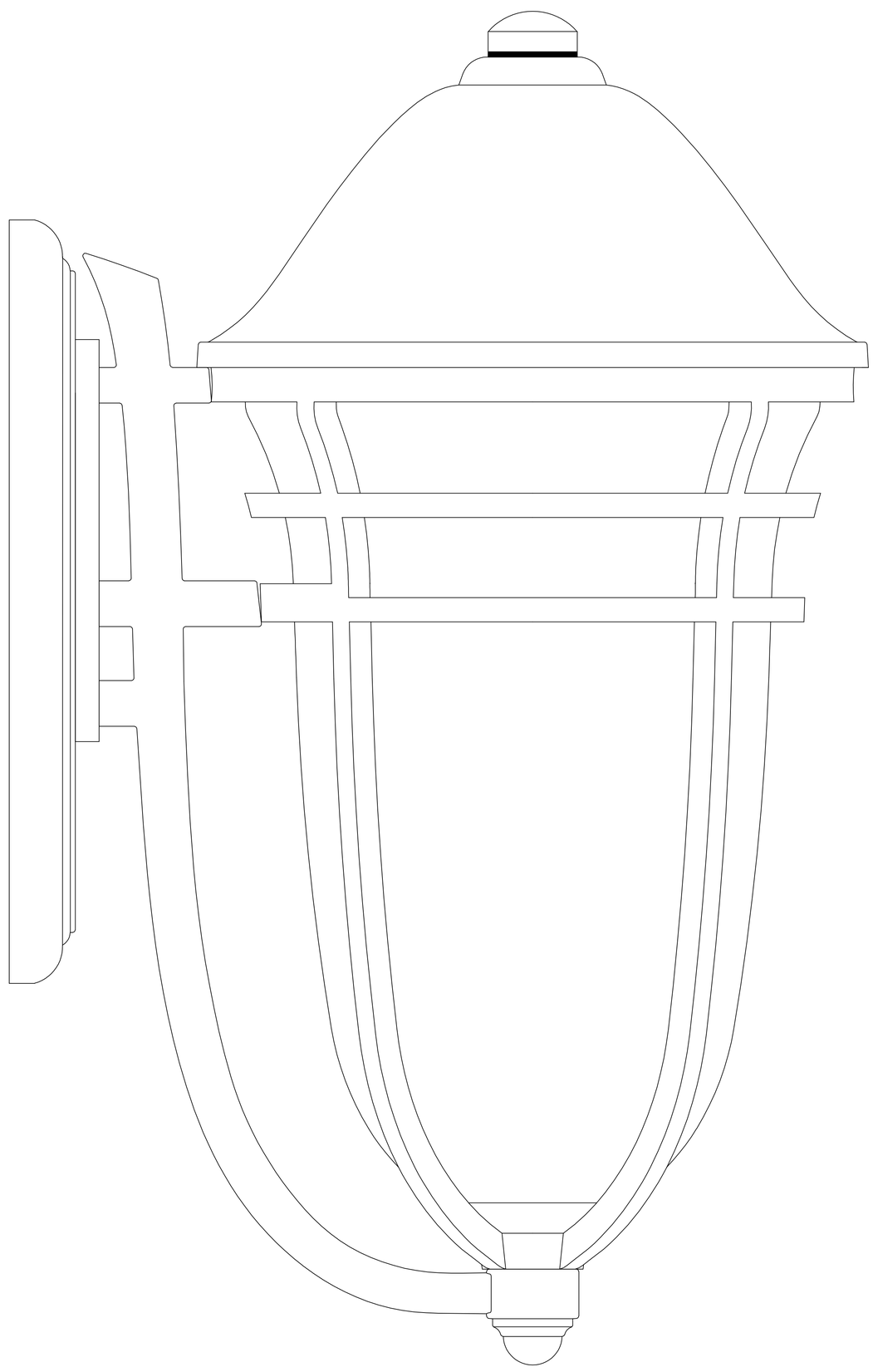

To prevent water intrusion, caulk around back-plate where fixture meets the wall using outdoor silicone sealant. Leave a small gap at the bottom to allow moisture to exit.

Bulb(not included): MB 1×60W

PRODUCTS ARE NOT INENDED
FOR COMMERCIAL USE.

MADE IN CHINA

PRODUCT NAME: Westport
ITEM NUMBER: 34204 / 34205

IMPORTANT: Turn off the power at the main fuse or circuit breaker box before staring installation.

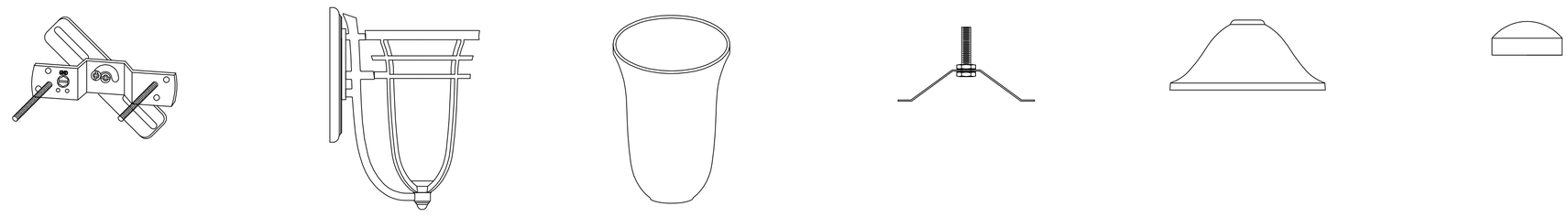

Bracket (A) Fixture (B) Glass (C) Trestle (D) Hood (E) Finial (F)

Locate all hardware & components before discarding packaging

1.)

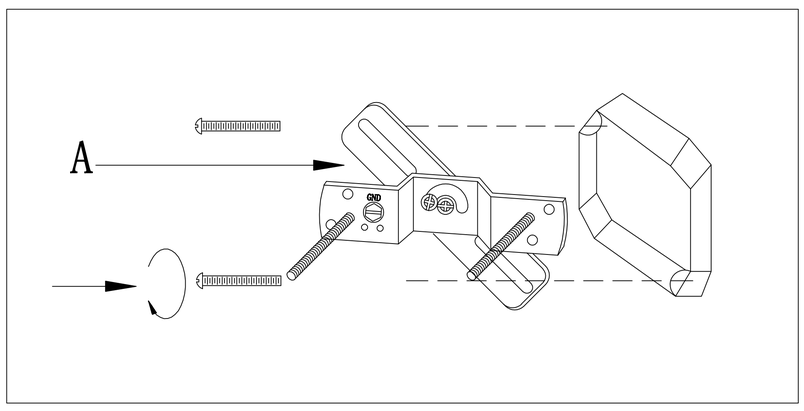

Step.1: Remove mounting bracket from fixture(B) and install to electrical box. then wire fixture to wires in outlet box. Copper wire is for Ground.

2.)

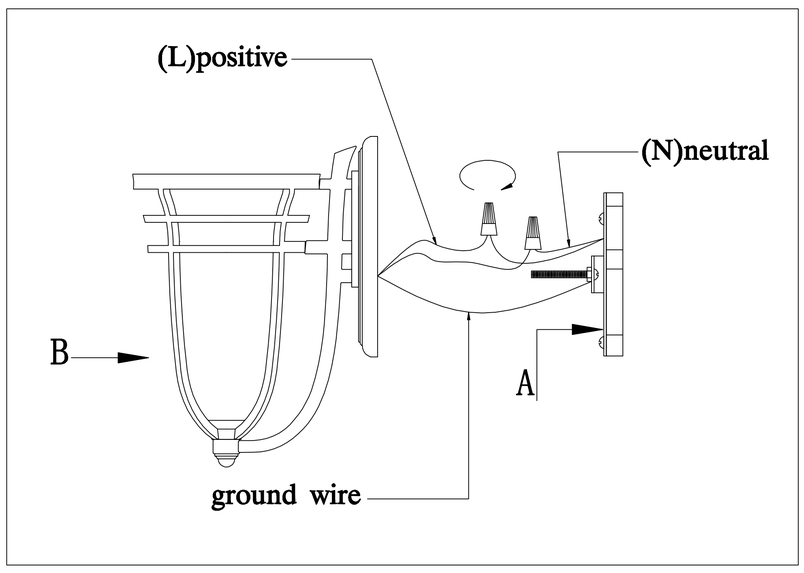

Step.2: Attach back plate to mounting bracket and tighten ball nuts so fixture meets wall. Caulk fixture where back plate meets the wall with silicone sealant.

3.)

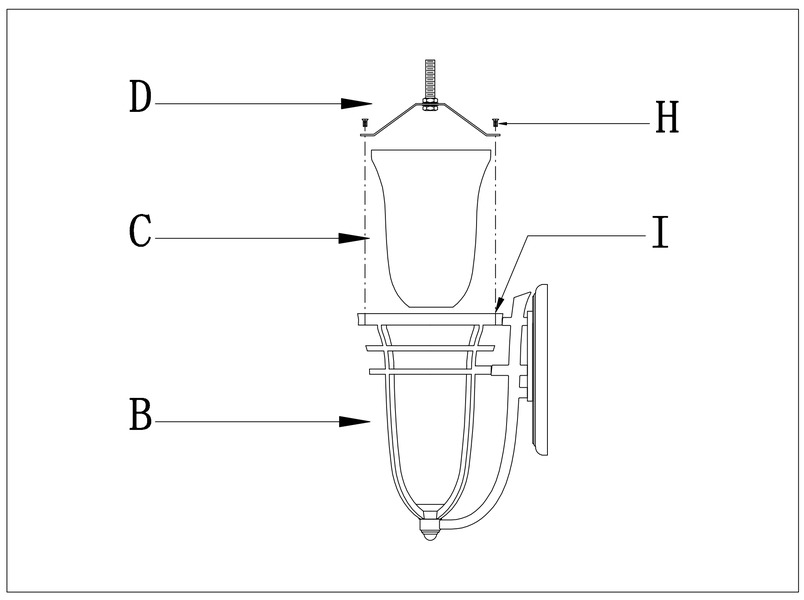

Step.3: Attach glass(C) and secure using trestle(D) to the fixture using screws(H) at point(I).

4.)

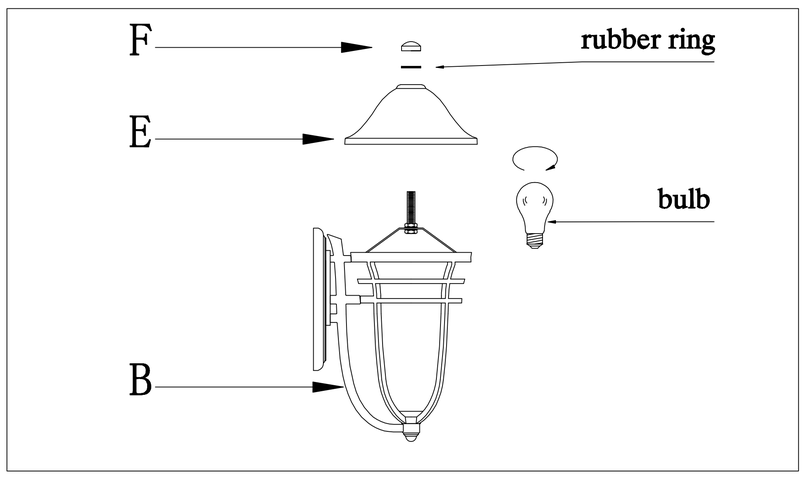

Step.4: Install MB bulb, attach hood(E) and finial(F) .

Cleaning & Care:

Clean with soft cloth and a mild detergent.
DO not use abrasive cleaner.

PRODUCTS ARE NOT INENDED FOR COMMERCIAL USE.

MADE IN CHINA