Esquire | 43664LNDBZ

Job Name:_____ Job Type:_____ Quantity:_____ Comments:_____

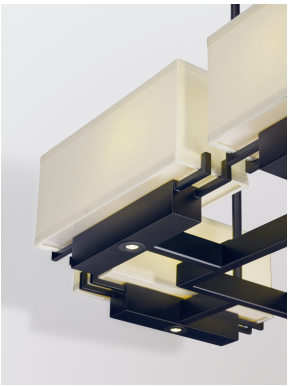

PRODUCT DESCRIPTION

Classic straight lines and large scale makes this collection an excellent candidate for light commercial applications. Dual LED downlights are encased in each rectangular font which is finished in a dark Bronze and contrasted nicely with a soft white Linen shade. This collection is 100% LED for low maintenance and energy efficiency.

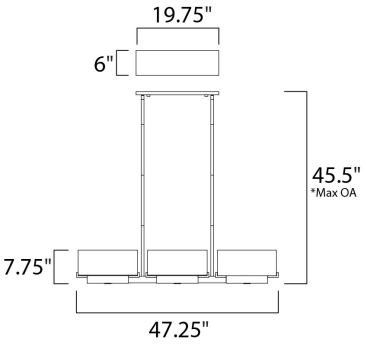

*max overall height

MEASUREMENTS

DIMENSION	: 47.25" L x 13.75" W x 7.75" H
MAX OAH	: 45.5" OAH
CANOPY	: 6" W x 0.75" H x 19.75" L
HANGING WEIGHT	: 26.62 lb

LAMPING

INPUT VOLTAGE	: 120V
LUMENS	: 5,740 Rated
BULB	: 8 x 9W LED LED , 0W Total
BULB INCLUDED	: (Included)
DIMMABLE	: Triac CL
CRI	: 90+ CRI
COLOR_TEMP	: 3000K

FINISHES OPTION

Dark Bronze

MATERIAL

Steel

RATINGS

Dry Location

ADDITIONAL

ADJUSTABLE
OPERATING TEMPERATURE:
-20°C (-4°F), 40°C (104°F)

Always consult a qualified electrician before installing any lighting product.

MAXIM® LIGHTING

WESTERN DISTRIBUTION CENTER (HEADQUARTER)
253 NORTH VINELAND AVE I CITY OF INDUSTRY, CA 91746

EASTERN DISTRIBUTION CENTER
4200 SHIRLEY DR. I ATLANTA, GA 30336

P. 626.956.4200 I **F.** 626.956.4225 I maximlighting.com