INSTALLATION AND SAFETY INSTRUCTIONS

FOR YOUR SAFETY

WARNING: BE SURE THE ELECTRICITY TO THE WIRES YOU ARE WORKING ON IS SHUT OFF; EITHER THE FUSE IS REMOVED OR THE CIRCUIT BREAKER IS SHUT OFF.

GENERAL

You don't need special tools to install this fixture. Be sure to follow the steps in the order given. Under no circumstances should a fixture be hung on house electrical wires, nor should a swag type fixture be installed on a ceiling which contains a radiant type heating system. Read instructions carefully. If you are unclear as to how to proceed, consult a qualified electrician.

NOTE: Proper wiring is essential for the safe operation of this fixture.

FIXTURE ASSEMBLY

Carefully removed the fixture from the carton and check that all parts are included as shown in figure. Be careful not to misplace any of the screws or parts, which are needed to install this fixture.

STEP 1: Thread the pipe (L) into the nipple (M), and thread the nipple (K1) into the pipe (L).

STEP 2: Thread pipe (J) into coupling (K), pipe (I) into pipe (J), pipe (H) into pipe (I), pipe (G) into pipe (H), and thread coupling (F) into pipe (G).

STEP 3: Place the steel line (D1) into the coupling (C1), then thread the finial (E1) onto the nipple (F1).

INSTALLATION

IMPORTANT: Do not attach fixture directly to outlet box.

STEP 1: Thread the mounting screw (A) into the match holes in the mounting bar (B).

STEP 2: Secure the mounting bar (B) to outlet box with the outlet box screws (C)

GROUNDING INSTRUCTIONS

STEP 1: Insert the green grounding screw into the hole with two raised dimples on the mounting bar. Wrap the ground wire from the fixture (if supplied) around the green grounding screw, then connect it to ground wire from the outlet box (if not fixed on the outlet box) using a wire connector. If ground wire from the fixture is not supplied, wrap the ground wire (if not fixed on the outlet box) from the outlet box around the green grounding screw and tighten it.

NEVER CONNECT GROUND WIRE TO BLACK OR WHITE POWER SUPPLY WIRES.

STEP 2: Take note of the color of the wire(s) on your fixture. Identify which group your fixture wire(s) falls into and connect the wires according to the directions below:

GROUP A: Connect to Black House Wire	GROUP B: Connect to White House Wire
BLACK	WHITE
*PARALLEL WIRE (round & smooth)	*PARALLEL WIRE (square & ridged)
WHITE OR GREY WITH TRACER	WHITE OR GREY WITHOUT TRACER
BROWN GOLD OR BLACK WITHOUT TRACER	BROWN, GOLD OR BLACK WITH TRACER

*NOTE: When parallel wire (SPT-I & SPT-2) is used, the tracer wire is square shaped or ridged and the less tracer wire is round in shape or smooth (seen best when viewed from wire end.)

STEP 3: Take your fixture wire(s) from group A and place evenly against the black wire from the outlet box. Do NOT twist wires together before using wire connectors.

STEP 4: Fit a wire connector over the wires and screw the connector clockwise until you feel firmness.

STEP 5: Try gently to pull the connector off the wires. If you can pull the connector off, carefully re-do steps 3 and 4, as above, and check again for a firm connection.

STEP 6: Connect the fixture wire from group B to the white wire from the outlet box in the same manner. Make sure no bare wires can be seen outside wire connectors.

FINAL ASSEMBLY

STEP 1: After wires are connected, tuck them carefully inside outlet box, Raise the canopy (D) allowing for the mounting screws (A) to protrude through the holes on canopy (D), and secure with the ball nuts (E).

STEP 2: Secure glass panels (P) to iron plate (Q) with screws (N) and plastic washers (O).

STEP 3: Install lamps (R). (Please do not exceed the maximum capacity recommended on the socket.).

STEP 4: Thread the nut (S) onto the nipple (T), then slide the Circle iron washer (U), Circle plastic washer (V), glass panels (W), square plastic washer (X), square iron washer (Y) and frame (A1) over the nipple (T) secure with the finial (B1).

STEP 5: Place the shade (Z) onto the frame (A1), then slide the frame (A1) over the arm (H1), and secure with the screws (G1).

CLEANING

To clean, wipe fixture with a soft cloth. Clean glass with a mild soap. Do not use abrasive materials such as scouring pads or powders, steel wool or abrasive paper.

ORDERING PARTS

Keep this sheet for future reference, and in case you need to order replacement parts. All parts for this fixture can be ordered from place of purchase. Be sure to use exact wording from illustration when ordering parts.

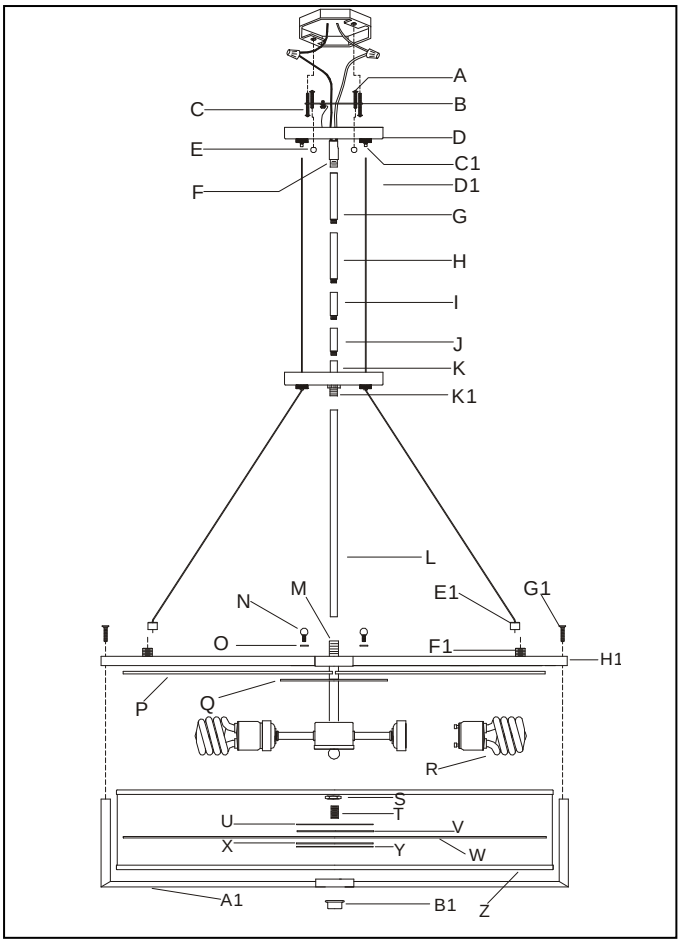

ITEM: 60-4045 60-4046 60-4345 60-4346

NUVO™ **a Satco Product.**