ATHENA

AM992

Table Lamp

1-150W Max.

Bulb Type: A

Switch: Hi-Lo Dimming

Amethyst Glazed Ceramic

Cast Metal Base and Ring Details

Aged Brass Finish

Open Weave Heather Linen Shade

COLOR OPTIONS:

See Athena Table for Color Options

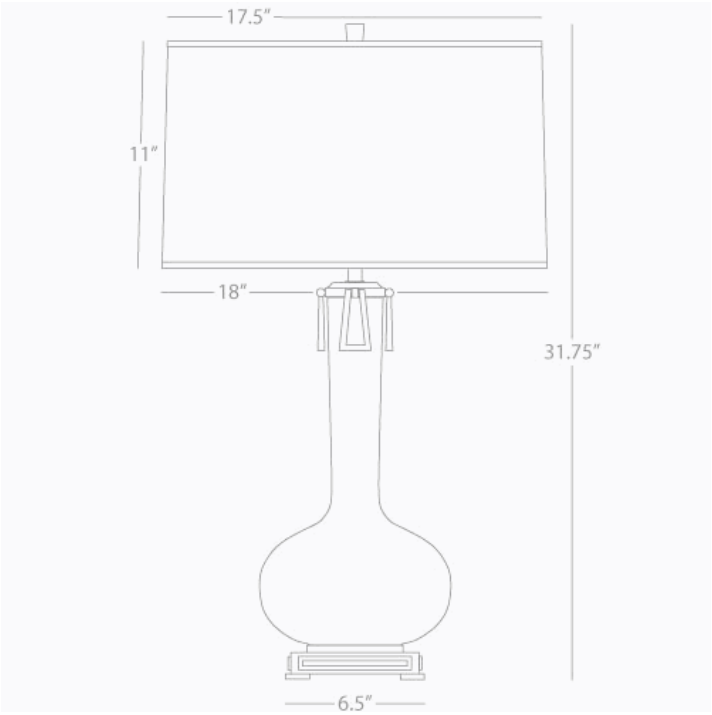

***** Available for Quick SHIP *****