CHD1125
ASSEMBLY & INSTALLATION GUIDE

WE RECOMMEND INSTALLATION OF THIS LIGHTING FIXTURE BE DONE BY A LICENSED ELECTRICIAN.

WARNING * SWITCH OFF THE MAIN ELECTRICAL SUPPLY FROM THE MAIN FUSE BOX/CIRCUIT BREAKER BEFORE INSTALLATION.**

INSPECT ITEM CAREFULLY BEFORE ATTEMPTING TO INSTALL. IF THERE IS ANY DAMAGE OR OBVIOUS DEFECT, DO NOT INSTALL.

ITEM MAY NOT BE RETURNED ONCE IT HAS BEEN INSTALLED.

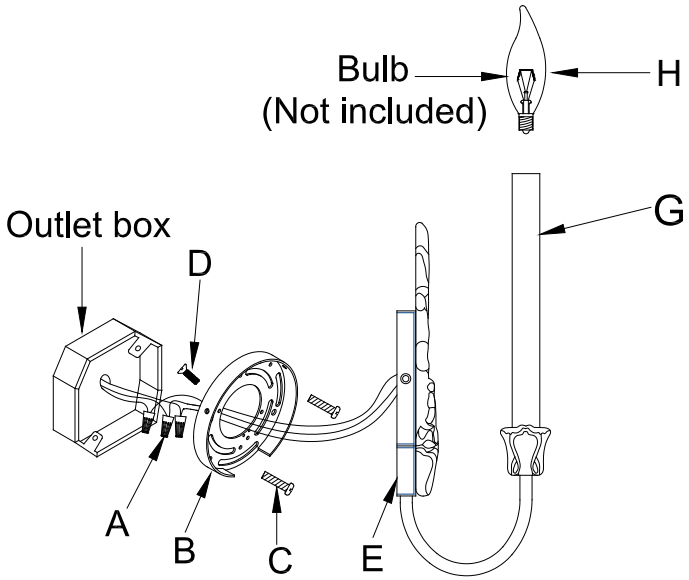

1. Carefully remove the mounting plate (B) from the back plate (E) by unscrewing the screws (D).
2. Use the two mounting screws(C) to secure the mounting plate (B) to the outlet box on the wall.
3. Connect the Ground (bare) fixture wire to the ground (usually bare) wire from your outlet box using wire nut (A). If your house does not have ground wire, then attach it to the green grounding screw on the mounting plate (B)
4. IT IS IMPERATIVE THAT THIS FIXTURE BE GROUNDED.
5. Attach the common wire (ribbed, no words) from the fixture to the white wire from the building using the provided wire nut (A).
6. Attach the hot wire (smooth, with words) from the fixture to the black wire from the building with the provided wire nut (A). Secure each connection by tightening and then checking that no wires can be pulled out.
7. IT IS IMPERATIVE THAT YOU NOT MIX THESE WIRES.
8. Carefully tuck the wires inside the outlet box.
9. Secure back plate (E) into mounting plate (B) by side screws (D).
10. Insert bulb (H) (not included) into socket (G).
11. Restore power and enjoy your new fixture.
12. Installation is complete, turn on power at fuse or circuit breaker.