ASSEMBLY INSTRUCTIONS

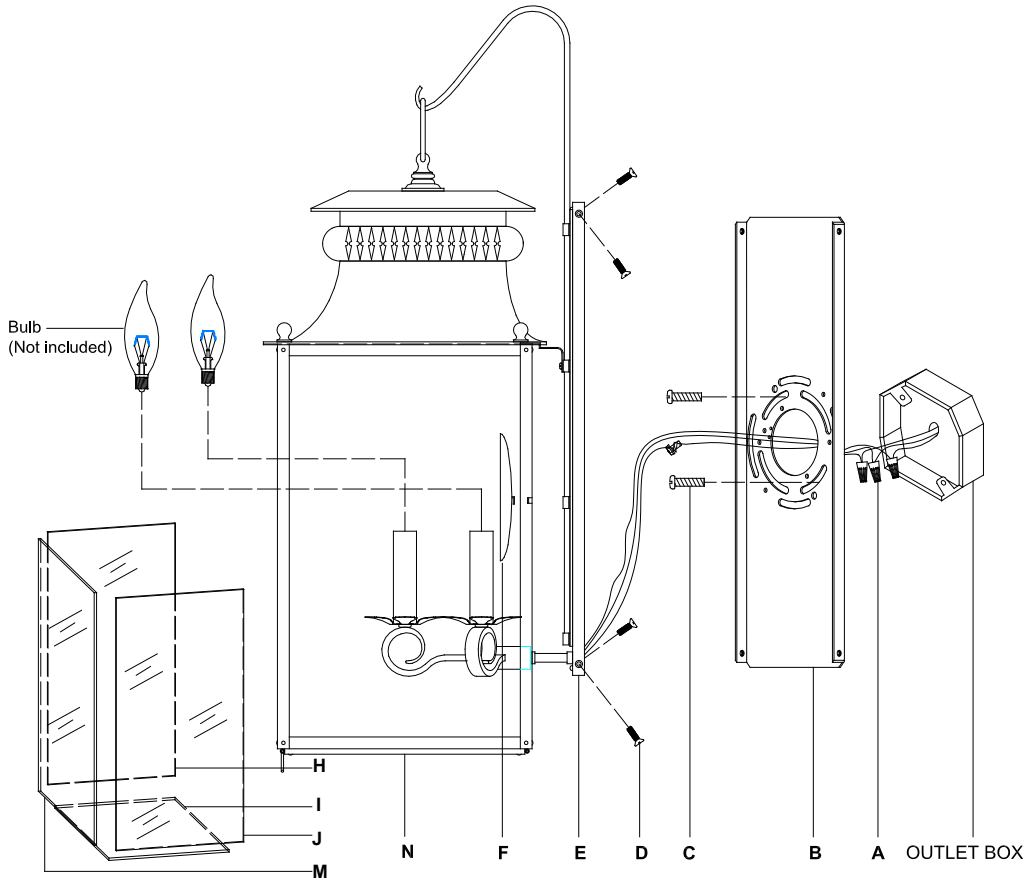

Honore Large Outdoor Bracketed Wall Lantern

Item # SK 2356

WE RECOMMEND INSTALLATION OF THIS LIGHTING FIXTURE BE DONE BY A LICENSED ELECTRICIAN.

WARNING***SWITCH OFF THE MAIN ELECTRICAL SUPPLY FROM THE MAIN FUSE BOX/CIRCUIT BREAKER BEFORE INSTALLATION.

INSPECT ITEM CAREFULLY BEFORE ATTEMPTING TO INSTALL. IF THERE IS ANY DAMAGE OR OBVIOUS DEFECT. DO NOT INSTALL.

ITEM MAY NOT BE RETURNED ONCE IT HAS BEEN INSTALLED.

NOTE: CAREFULLY UNPACK EACH PIECE IN TOP LAYER OF PACKING PRIOR TO REMOVING. RETAIN ALL PACKING MATERIALLY UNTIL INSPECTION AND INSTALLATION ARE FINAL.

1. Carefully remove all parts from the box.
2. Remove the mounting plate (B) from the backplate (E) by loosening the side screws (D).
3. Affix mounting plate (B) onto the outlet box and secure with mounting screws (C).
4. Connect the hot wire (BLACK) from the fixture to the hot wire from the outlet box (usually BLACK). Fasten them together with a plastic wire connector (A) provided and wrap the connection with electrical tape.
5. Connect the neutral wire (WHITE) from the fixture to the wire from the outlet box (usually WHITE).
   DO NOT REVERSE THE HOT AND NEUTRAL CONNECTIONS OR SAFETY WILL BE COMPROMISED.
6. Connect ground wire from the fixture (bare copper) to ground wire from the outlet box (usually green or copper in color).
   IT IS IMPERATIVE THAT THIS FIXTURE BE GROUNDED.
7. Attach the backplate (E) onto the mounting plate (B) and secure with side screws (D).
8. Hang the reflective plate (F) to the inside of frame (N).
9. Fit the side glass panel (J) & (H) to the frame (N) and screw it by bending the metal tabs.
10. Fit the front glass panel (M) to the frame (N) and screw it by bending the metal tabs.
11. Fit the bottom glass panel (I) to the frame (N) and screw it by bending the metal tabs.
12. Insert bulbs (not included) into the sockets.
13. Installation is complete, turn on power at fuse or circuit breaker.

***Clean with a dry, soft cloth only. Do not use harsh abrasives or chemical agents.

VISUAL COMFORT & CO. Est. 1987