TEAR SHEET

Jane Swing Arm Wall Light
Item # AH 2337GM-L

Designer: Alexa Hampton

Height: 13.5"
Width: 14"
Extension: 13" - 23"
Backplate: 3.25" x 4.75" Rectangle
Finishes: AN, GM, HAB, PN
Shade Treatments: L
Shade Details: 6" x 12" x 9"
Socket: E26 On-Off
Wattage: 40 A19
Weight: 6 Pounds
Note: Cord Cover Included

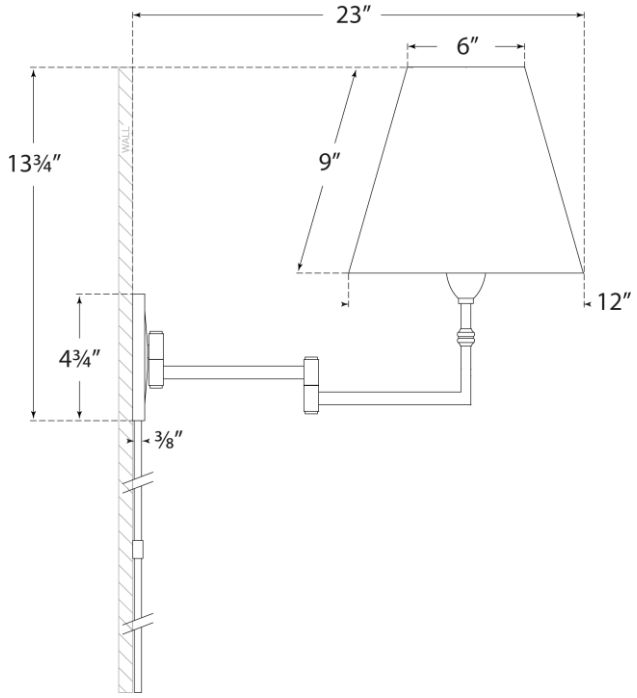

VISUAL COMFORT