TEAR SHEET

Slender Column Table Lamp
Item # CHA 8926CG-NP

Designer: Chapman & Myers

Height: 30"
Width: 17"
Base: 6" Square
Finishes: CG
Shade Treatments: NP, SBP
Shade Details: 13" x 17" x 10"
Socket: E26 Hi-Lo
Wattage: 150 A21
Weight: 19 Pounds
Note: French Wired
©EFC DESIGNS

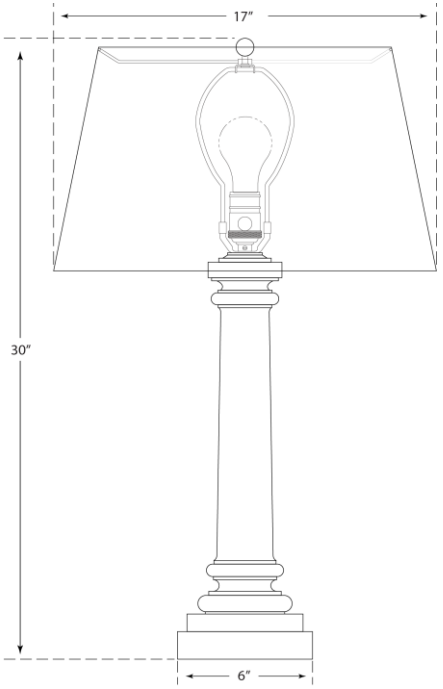

VISUAL COMFORT