SPEC SHEET

Quattro Table Lamp
Item # CHA 8974ALB-NP

Designer: Chapman & Myers

Height: 29"
Width: 19"
Base: 4.5" x 11" Rectangle
Finishes: ALB
Shade Treatments: NP
Shade Details: 15" x 19" x 12"
Socket: E26 Dimmer
Wattage: 150 A
Note: French Wired
©EFC DESIGNS

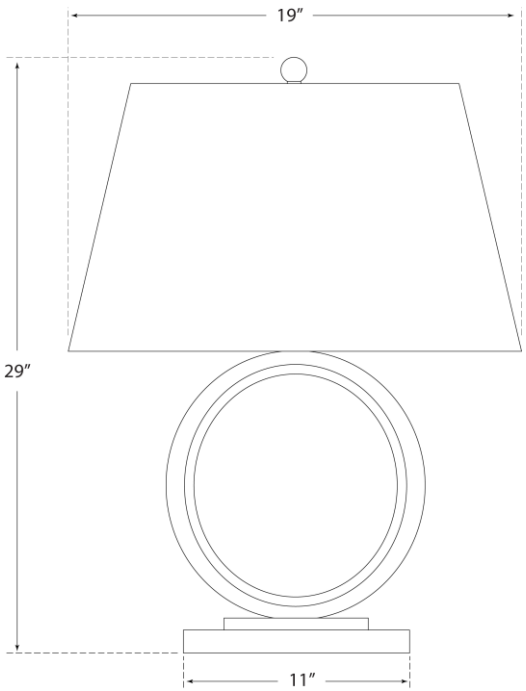

VISUAL COMFORT