TEAR SHEET

Coy Medium Table Lamp

Item # CS 3611MBZ-PL

Designer: Christopher Spitzmiller

Height: 31.5"
Width: 18.25"
Base: 6" Round
Finishes: AQC, CIN, IVO, LME, MBZ, MSB
Shade Treatments: PL
Shade Details: 16" x 18.25" x 12"
Socket: E26 Dimmer
Wattage: 100 A19
Weight: 12 Pounds
Note: Reactive Ceramic Glazes Will Vary in Color and Texture

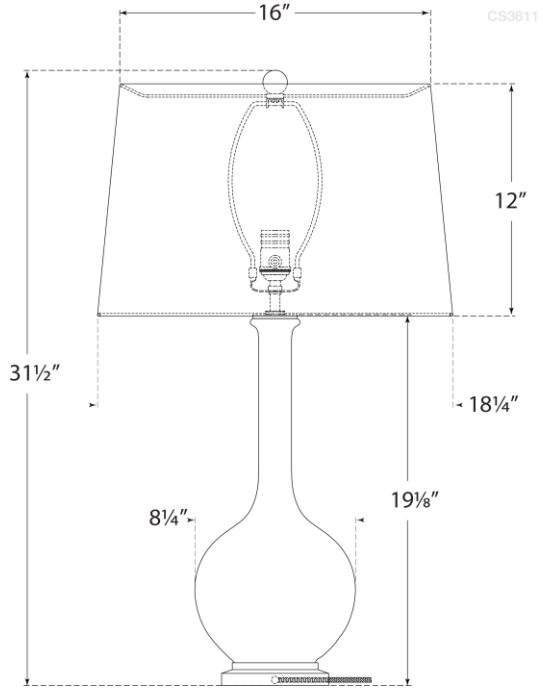

VISUAL COMFORT