SPEC SHEET

Gillespie Medium Oval Lantern

Item # S 5331AI-CG

Designer: Studio VC
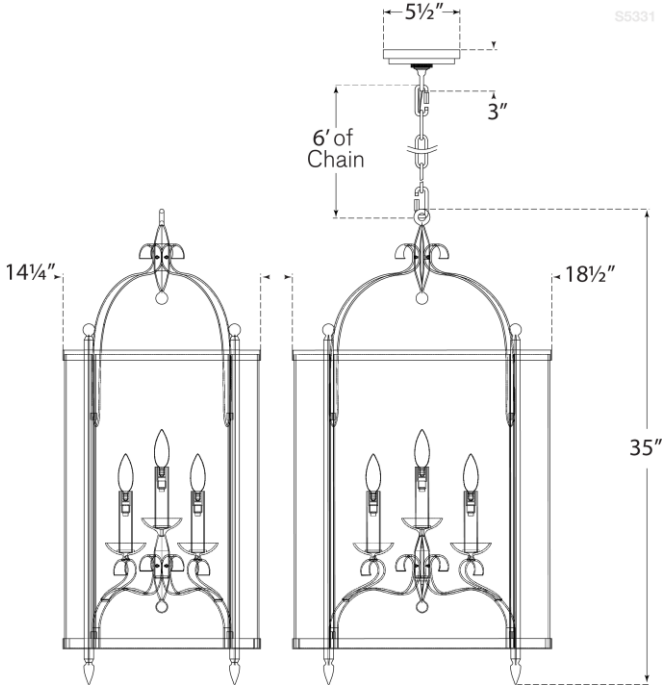
Height: 35"
Width: 19"
Canopy: 5.5" Round
Finishes: AI
Glass Options: CG
Socket: 5 - E12 Candelabra
Wattage: 5 - 40 C