SPEC SHEET

Calliope Hanging Shade
Item # TOB 5135HAB-NP

Designer: Thomas O'Brien

Height: 23"
Width: 24"
Canopy: 5" Round
Finishes: BR/HAB, HAB, PN, SN/AN
Shade Treatments: NP
Shade Details: 21" x 24" x 12"
Socket: 6 - E12 Candelabra
Wattage: 6 - 60 B

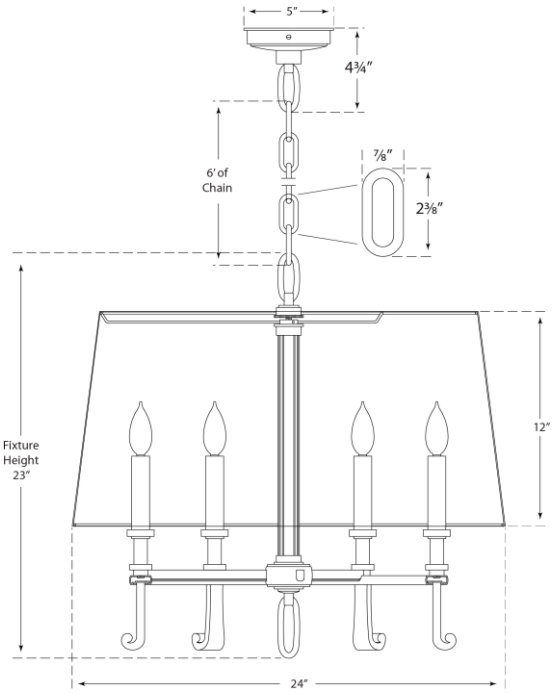

DRY

4

VISUAL COMFORT & CO. Est. 1987