TEAR SHEET

Wilton Single Sconce
Item # SL 2845AN-NP

Designer: Chapman & Myers

Height: 13.75"
Width: 5"
Extension: 8"
Backplate: 5" Round
Finishes: AN, BZ, HAB, PN
Shade Treatments: NP
Shade Details: 4.25" x 4.5" x 5.5"
Socket: E12 Candelabra
Wattage: 60 B11
Weight: 3 Pounds
©EFC DESIGNS

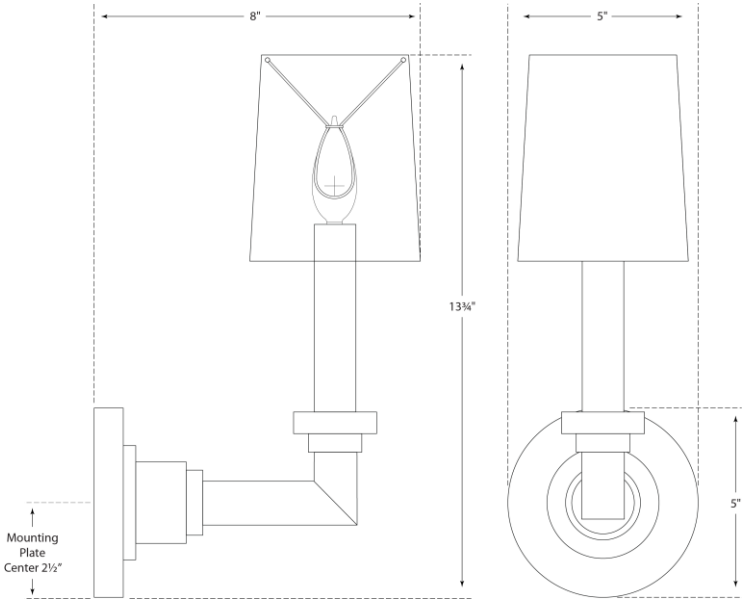

VISUAL COMFORT