TEAR SHEET

Channing Double Sconce
Item # TOB 2121BZ-NP

Designer: Thomas O'Brien

Height: 14"
Width: 15"
Extension: 9.5"
Backplate: 5.5" x 6.25" Oval
Finishes: BZ, HAB, PS
Shade Treatments: NP
Shade Details: 4.5" x 6"x 5.5" Oval
Socket: 2 - E12 Candelabra
Wattage: 2 - 60 B11
Weight: 4 Pounds

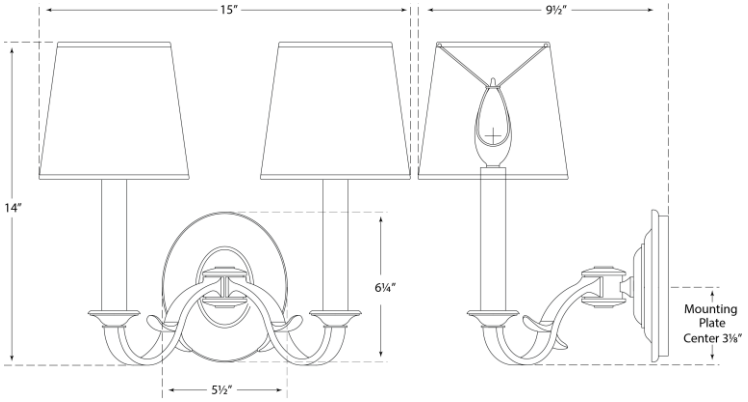

VISUAL COMFORT