WAC LIGHTING

Fixture Type:

Catalog Number:

Project:

Location:

Scout

6" Wall Light

Model & Size	*Color Temp & CRI*	*Watt*	*LED Lumens*	*Delivered Lumens*	*Finish*
❍ BL-28903L ❍ BL-28903R	3000K 90	9W	465	184	❍ BK Black ❍ BN Brushed Nickel ❍ WT White

Example: **BL-28903L-BK**

DESCRIPTION

Bed light features a pivotable arm light with convenient fingertip touch dimming on the base.

FEATURES

- On-off switch on fixture
- Pivotable arm with light
- Integral driver
- Fits over a standard junction box
- Fingertip touch dimming on base
- Driver concealed within the canopy
- 5 year warranty

SPECIFICATIONS

Construction:	Aluminum
Power:	9W
Input:	100-240 VAC, 50/60Hz
Rated Life:	50000 Hours
Mounting:	Heavy gauge retention clips support trim firmly. Safety cabling standard., Can be mounted on wall in all orientations
Finish:	White, Black, Brushed Nickel
Operating Temp:	-4°F to 104°F (-20°C to 40°C)
Standards:	ETL, cETL, Damp Location Listed, ADA

FINISHES

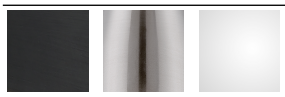

Black | Brushed Nickel | White

LINE DRAWING

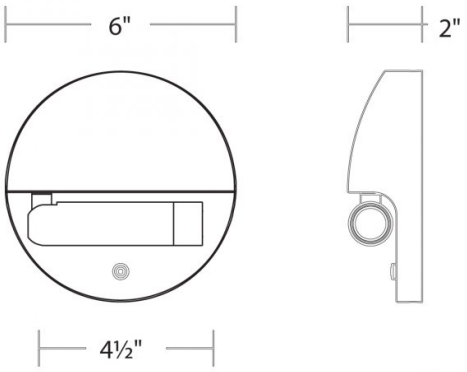

Left
BL-28903-L