WAC LIGHTING

Fixture Type:

Catalog Number:

Project:

Location:

Tesla Pro 3.5"

30°- 45° Adjustable Trim Square

Model	*Beam*	*Color Temp & CRI*	*Lumens*	*CBCP*	*Finish*
❍ HR3LEDT918P	❍ F 38°	❍ 827 2700K - 80	955	1569	❍ BN Brushed Nickel
		❍ 830 3000K - 80	1015	1662	❍ CB Copper Bronze
		❍ 835 3500K - 80	1090	1509	❍ WT White
		❍ 840 4000K - 80	1115	1834	
		❍ 927 2700K - 90	825	1351	
		❍ 930 3000K - 90	925	1509	
	❍ N 26°	❍ 827 2700K - 80	1000	2537	
		❍ 830 3000K - 80	1045	2665	
		❍ 835 3500K - 80	1135	2933	
		❍ 840 4000K - 80	1150	2916	
		❍ 927 2700K - 90	845	2177	
		❍ 930 3000K - 90	950	2460	
	❍ S 15°	❍ 827 2700K - 80	775	3152	
		❍ 830 3000K - 80	835	3378	
		❍ 835 3500K - 80	845	3417	
		❍ 840 4000K - 80	865	3507	
		❍ 927 2700K - 90	650	2648	
		❍ 930 3000K - 90	590	2397	

Example: **HR3LEDT918PF827BN**

DESCRIPTION

Tesla series is at the pinnacle of where lighting innovation meets energy-efficiency. A high-performance serviceable integrated LED with a state of the art light engine delivers incredible maintenance-free optics and performance ideal for high-end residential and commercial applications. With a wide variety of solid die-cast trims in a multitude of handsome plated or powder coated finishes, the Tesla collection is sure to enhance style and appeal in any space. Tesla PRO provides up to 60% higher lumen output over the standard Tesla collection for when more lighting is required such as in tall ceiling applications. The trim and LED engine are manufactured as a single unit with endless amounts of specifications including shape and finish of trim, adjustability, color temperature, and beam distribution to create the perfect combinations of form, factor, and function.

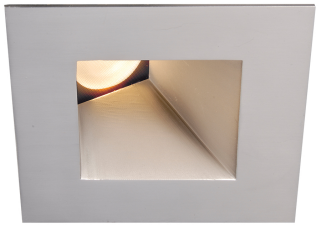

FEATURES

- 30° visual cutoff angle for glare control
- 5 year warranty

SPECIFICATIONS

Construction:	Die-cast aluminum construction
Power:	22W
Input:	120-277 VAC, 50/60Hz
Dimming:	ELV: 100-5%, 0-10V: 100-0%
Light Source:	Integrated LED 3 Step Mac Adam Ellipse
Rated Life:	50000 Hours
Mounting:	Heavy gauge retention clips support trim firmly
Finish:	Electroplated Brushed Nickel, Electrostatically Powder Coated White, Electroplated Copper Bronze
Ceiling Thickness:	1/2" - 3/4"
Operating Temp:	-4°F to 104°F (-20°C to 40°C)
Standards:	ETL, cETL, Damp Location Listed

FINISHES

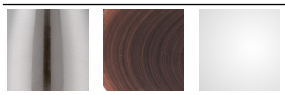

Brushed Nickel | Copper Bronze | White

LINE DRAWING

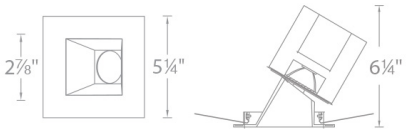

WAC LIGHTING

Fixture Type:

Catalog Number:

Project:

Location:

Tesla 3.5"

New Construction Housing IC Airtight

Model & Product

❍ HR3LED-H18D1 Tesla 3.5in LED IC-Rated Airtight Narrow New Construction Housing

Example: **HR-3LED-H18D1-ICA**

DESCRIPTION

Tesla series is at the pinnacle of where lighting innovation meets energy-efficiency. A high-performance serviceable integrated LED with a state of the art light engine delivers incredible maintenance-free optics and performance ideal for high-end residential and commercial applications. With a wide variety of solid die-cast trims in a multitude of handsome plated or powder coated finishes, the Tesla collection is sure to enhance style and appeal in any space. Tesla PRO provides up to 60% higher lumen output over the standard Tesla collection for when more lighting is required such as in tall ceiling applications. The trim and LED engine are manufactured as a single unit with endless amounts of specifications including shape and finish of trim, adjustability, color temperature, and beam distribution to create the perfect combinations of form, factor, and function.

FEATURES

• Tesla 3.5in LED IC-Rated Airtight Narrow New Construction Housing
• The Tesla series is engineered with state of the art high output LED technology for optimal thermal management and heat dissipation
• Driver concealed within the fixture
• 5 year warranty

SPECIFICATIONS

Construction:	20 Gauge cold rolled steel
Power:	21.5W
Input:	120-277 VAC, 50/60Hz
Dimming:	ELV: 100-5%, 0-10V: 100-0%
Mounting:	Heavy gauge retention clips secures housing firmly to ceiling
Cut Out:	4 5/8"
Finish:	
Ceiling Thickness:	1/2" - 3/4"
Operating Temp:	-4°F to 104°F (-20°C to 40°C)
Standards:	ETL, cETL, IC, Airtight

LINE DRAWING

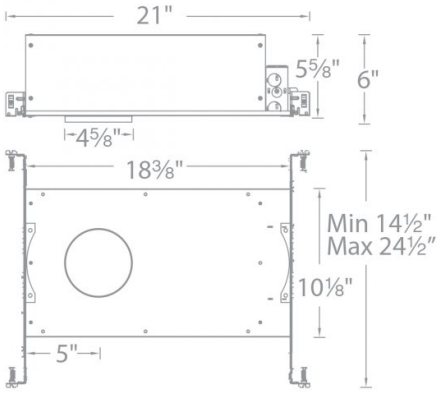

WAC LIGHTING

Fixture Type:

Catalog Number:

Project:

Location:

Tesla 3.5"

Remodel Housing

Model & Product

❍ HR-3LED-R22D Tesla 3.5in LED Non-IC Remodel Housing for Adjustable Trim

Example: **HR-3LED-R22D**

DESCRIPTION

Tesla series is at the pinnacle of where lighting innovation meets energy-efficiency. A high-performance serviceable integrated LED with a state of the art light engine delivers incredible maintenance-free optics and performance ideal for high-end residential and commercial applications. With a wide variety of solid die-cast trims in a multitude of handsome plated or powder coated finishes, the Tesla collection is sure to enhance style and appeal in any space. Tesla PRO provides up to 60% higher lumen output over the standard Tesla collection for when more lighting is required such as in tall ceiling applications. The trim and LED engine are manufactured as a single unit with endless amounts of specifications including shape and finish of trim, adjustability, color temperature, and beam distribution to create the perfect combinations of form, factor, and function.

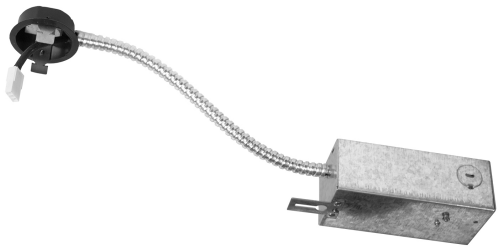

FEATURES

• Tesla 3.5in LED Non-IC Remodel Housing for Adjustable Trim
• The Tesla series is engineered with state of the art high output LED technology for optimal thermal management and heat dissipation
• Driver concealed within the fixture
• 5 year warranty

SPECIFICATIONS

Construction:	20 Gauge cold rolled steel
Power:	21.5W
Input:	120-277 VAC, 50/60Hz
Dimming:	ELV: 100-5%, 0-10V: 100-0%
Mounting:	Heavy gauge retention clips secures housing firmly to ceiling
Cut Out:	4 5/8"
Finish:	
Ceiling Thickness:	1/2" - 1"
Operating Temp:	-4°F to 104°F (-20°C to 40°C)
Standards:	ETL, cETL, Non IC
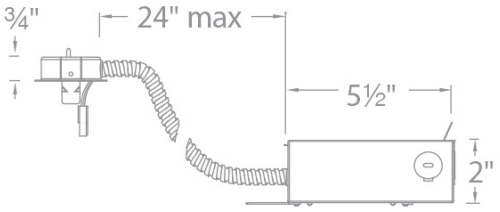
LINE DRAWING