dweLED

Fixture Type:

Catalog Number:

Project:

Location:

Piano

Swing Arm 3000K

Model & Size	*Color Temp & CRI*	*Finish*	*Watt*	*LED Lumens*	*Delivered Lumens*	*Title 24*
❍ PL-47023 23"	❍ 3000K 90	❍ AB Aged Brass	8W	530	263	YES
	❍ 3000K 90	❍ BN Brushed Nickel	8W	530	263	YES

Example: **PL-47023-AB**

DESCRIPTION

Stylish with full flexibility. Three adjustment points to perfectly illuminate artwork.

FEATURES

- 3 points of articulation
- Continent on/off switch on fixture
- Finger touch dimming
- Driver conceals within the canopy
- 5 Year warranty

SPECIFICATIONS

Color Temp:	3000K
Input:	100-240 VAC, 50/60Hz
CRI:	90
Rated Life:	50000 Hours
Standards:	ETL, cETL, Title 24: 2019
	Damp Location Listed
Construction:	Steel hardware with acrylic diffuser

FINISHES

Aged Brass

Brushed Nickel

LINE DRAWING

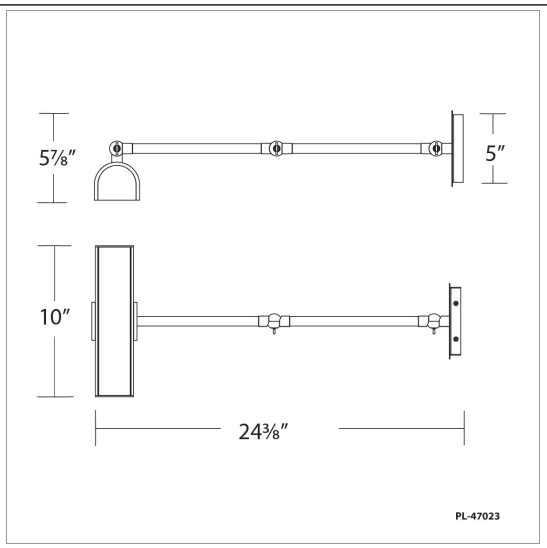

WAC Lighting retains the right to modify the design of our products at any time as part of the company's continuous improvement program. May 2020